Drying Tumblers

20, 30, 50 and 75 Pound Capacities
Z-Coded

Refer to Page 3 for Model Numbers

Parts

Alliance Laundry Systems

www.comlaundry.com

Part No. D0924R2
October 2011

Table of Contents

Title	Page
Parts Ordering Information	2
Serial Plate Location	2
Model Identification	3
Cabinet Front	4
Thermostat	6
Thermostat Hygrometer	8
Top Front Panel	10
Middle Front Panel	12
Door Assembly	14
Lower Front Panel	16
Operating Door - OPL DX3S and DX3RS Models	18
Operating Door - Coin DX3S and DX3RS Models	20
Operating Door - ProHC OPL Models	22
Basket Assembly - DR20 Models	24
Basket Assembly - DR30 Models	26
Basket Assembly -DR50 Models	28
Basket Assembly - DR75 Models	30
Cabinet Back	32
Draught Valve	34
Drum Drive - Reduction	36
Drum Drive - Main Bearing	38
Motor, Fan and Drum Drive	40
Motor, Fan and Motor Basket - Reversing Models	42
Electric Junction Box - Gas Models	44
Electric Junction Box - Electric and Steam Models	46
Gas Heating System	48
Electric Heating System	50
Steam Heating System	52
Parts Index	55

© Copyright 2011, Alliance Laundry Systems LLC

All rights reserved. No part of the contents of this book may be reproduced or transmitted in any form or by any means without the expressed written consent of the publisher.

Parts Ordering Information

If literature or replacement parts are required, contact the source from whom the machine was purchased or contact Alliance Laundry Systems at (920) 748-3950 for the name and address of the nearest authorized parts distributor.

For technical assistance, call either of the numbers listed below:

(920) 748-3121 Ripon, Wisconsin

+32 56 41 20 54 Wevelgem, Belgium

Serial Plate Location

When calling or writing about your product, be sure to mention model and serial numbers. Model and serial numbers are located on nameplate(s).

© Copyright, Alliance Laundry Systems LLC – DO NOT COPY or TRANSMIT

Model Identification

Information in this manual is applicable to these tumbler models:

DR20-Z
DR30-Z
DR50-Z
DR75-Z

© Copyright, Alliance Laundry Systems LLC – DO NOT COPY or TRANSMIT

Cabinet Front

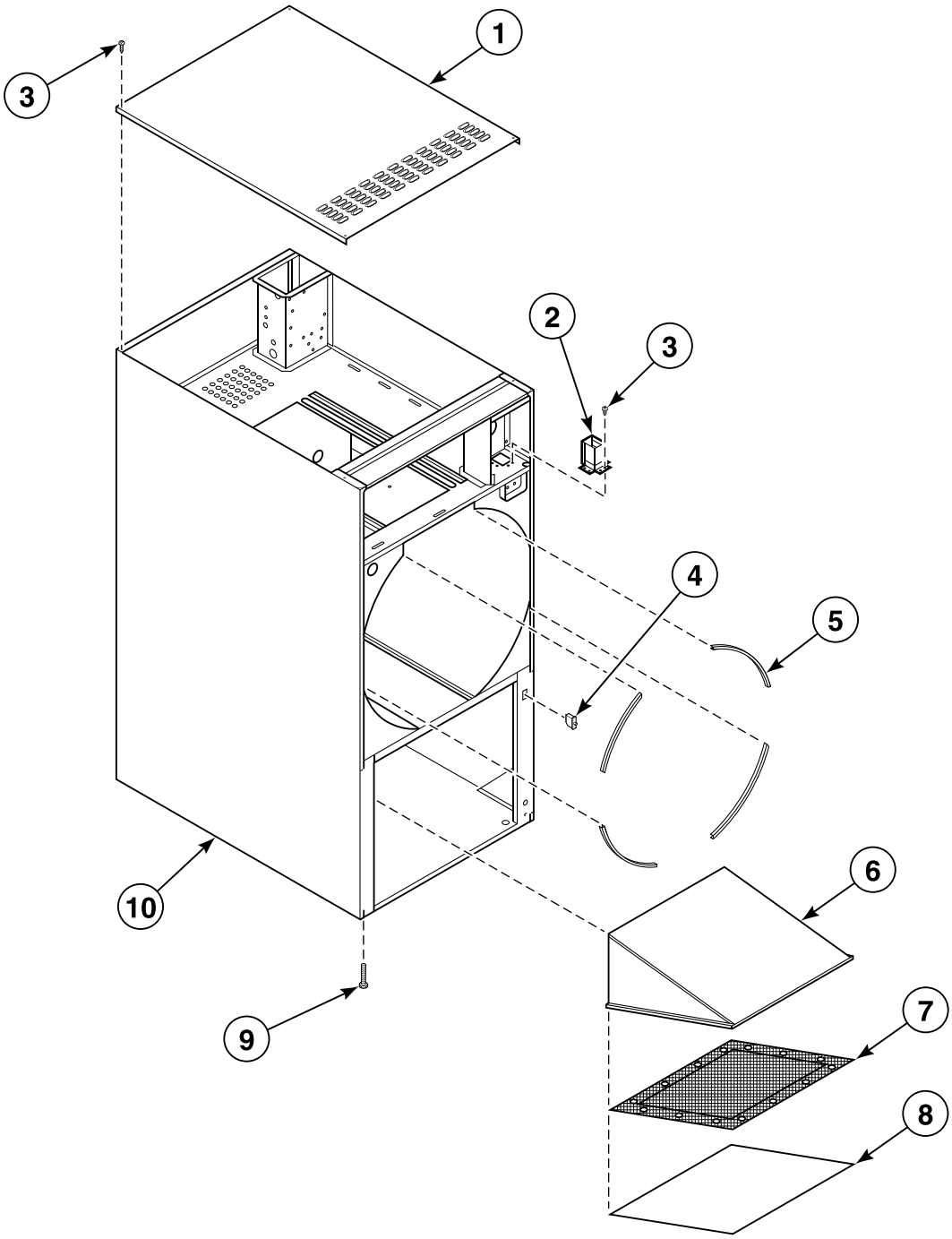

BE000472P_D0924

© Copyright, Alliance Laundry Systems LLC – DO NOT COPY or TRANSMIT

Cabinet Front

REF	PART NO.	DESCRIPTION	COMMENTS
1	254/TU015/152	Top Panel	Models DR20-Z and DR30-Z
	254/TU015/228	Top Panel	Models DR20-Z and DR30-Z
	254/TU015/183	Top Panel	Models DR50-Z and DR75-Z
	254/TU014/849	Top Panel	Models DR50-Z and DR75-Z
2	254/CSA01/435	Coin Box	
3	254/TU007/733	Screw	
4	254/EA000/650	Microswitch	
5	254/TU005/876	Gasket	
6	254/CSA01/528	Dust Filter	Models DR20-Z and DR30-Z
	254/TU010/290	Dust Filter	Models DR50-Z and DR75-Z
7	254/CA013/033	Lint Screen	Models DR20-Z and DR30-Z
	254/TU010/362	Lint Screen	Models DR50-Z and DR75-Z
8	254/CA010/567	Lint Filter	Models DR20-Z and DR30-Z
	254/TU005/225	Lint Filter	Models DR50-Z and DR75-Z
9	254/TU003/211	Leveling Leg	
10	254/TU015/139	Side Panel	Models DR20-Z and DR30-Z
	254/TU015/200	Side Panel	Models DR20-Z and DR30-Z
	254/TU014/900	Side Panel	Models DR50-Z and DR75-Z
	254/TU014/819	Side Panel	Models DR50-Z and DR75-Z

© Copyright, Alliance Laundry Systems LLC – DO NOT COPY or TRANSMIT

Thermostat

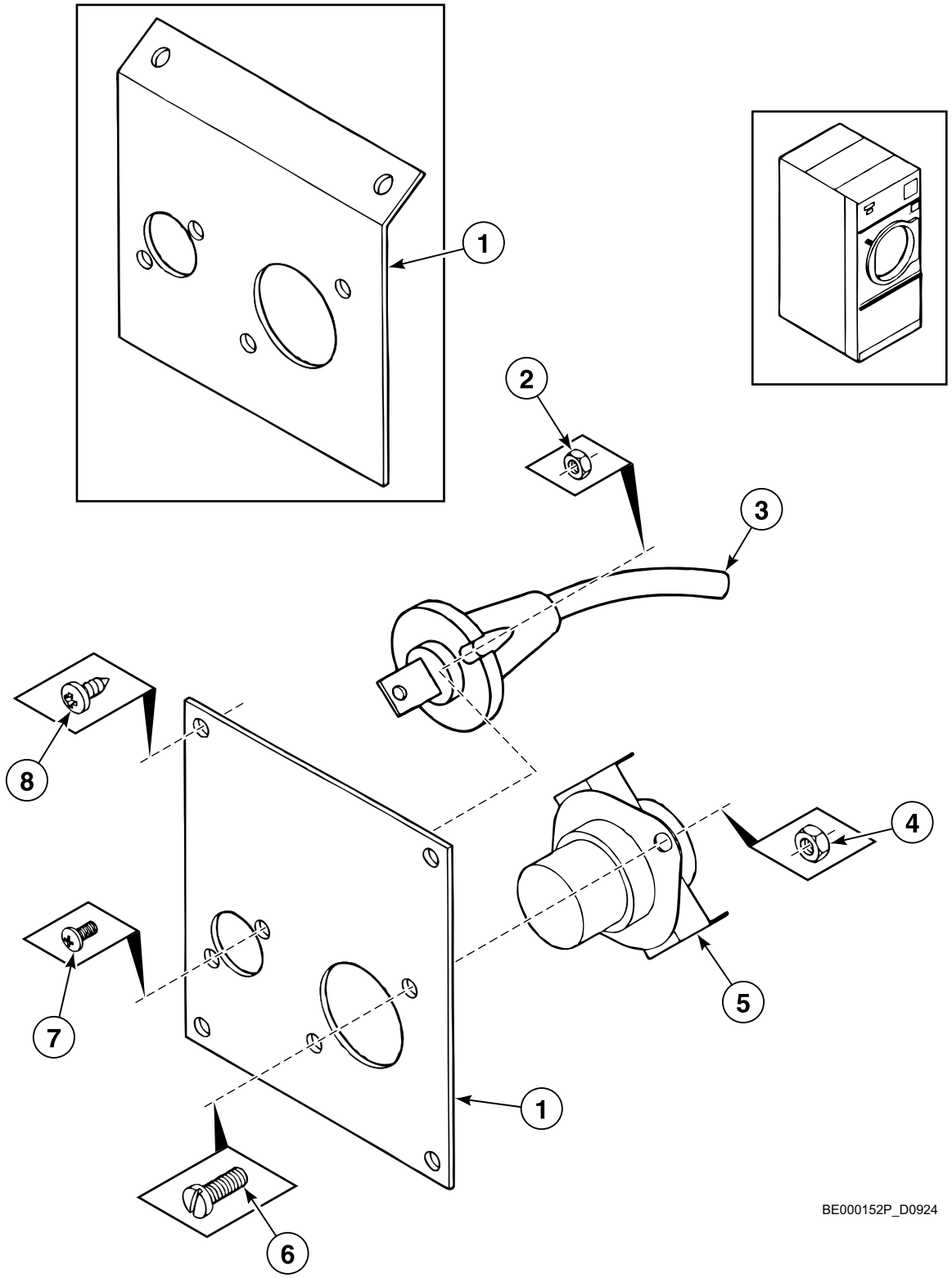

© Copyright, Alliance Laundry Systems LLC – DO NOT COPY or TRANSMIT

Thermostat

REF	PART NO.	DESCRIPTION	COMMENTS
1	254/CA013/067	Plate Assembly	
2	254/TU003/400	Nut	
3	254/00007/00	Temperature and Humidity Sensor	1700 mm
	254/00008/00	Temperature and Humidity Sensor	2000 mm
	254/00009/00	Temperature and Humidity Sensor	2300 mm
4	254/TU003/266	Nut	
5	254/EA000/594	Temperature Switch	
6	254/M000/262	Screw	
7	254/SB000/952	Screw	
8	254/TU007/733	Screw	

© Copyright, Alliance Laundry Systems LLC – DO NOT COPY or TRANSMIT

Thermostat Hygrometer

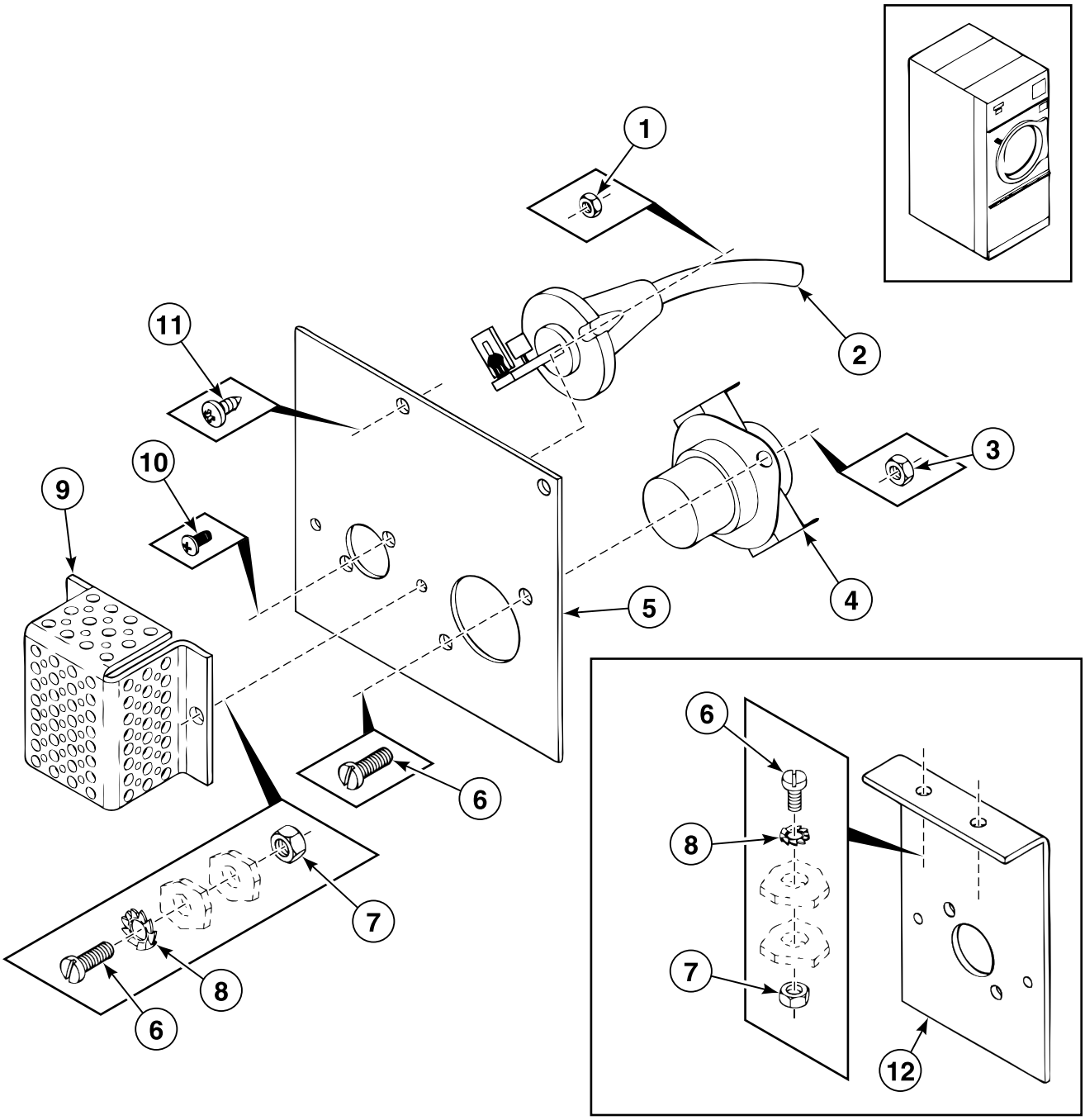

© Copyright, Alliance Laundry Systems LLC – DO NOT COPY or TRANSMIT

Thermostat Hygrometer

REF	PART NO.	DESCRIPTION	COMMENTS
1	254/TU003/400	Nut	
2	254/00058/00	Temperature and Humidity Sensor	1700 mm
	254/00059/00	Temperature and Humidity Sensor	2000 mm
	254/00071/10	Temperature and Humidity Sensor	2300 mm
3	254/TU003/266	Nut	
4	254/EA000/594	Temperature Switch	
5	254/00062/00	Plate Assembly	
6	207/00004/00	Screw	
7	204/00007/00	Nut	
8	203/00006/00	Washer	
9	254/00063/00	Thermostat/Hygrometer Protection	
10	254/SB000/952	Screw	
11	254/TU007/733	Screw	
12	254/00061/00	Top Plate Assembly	

© Copyright, Alliance Laundry Systems LLC – DO NOT COPY or TRANSMIT

Top Front Panel

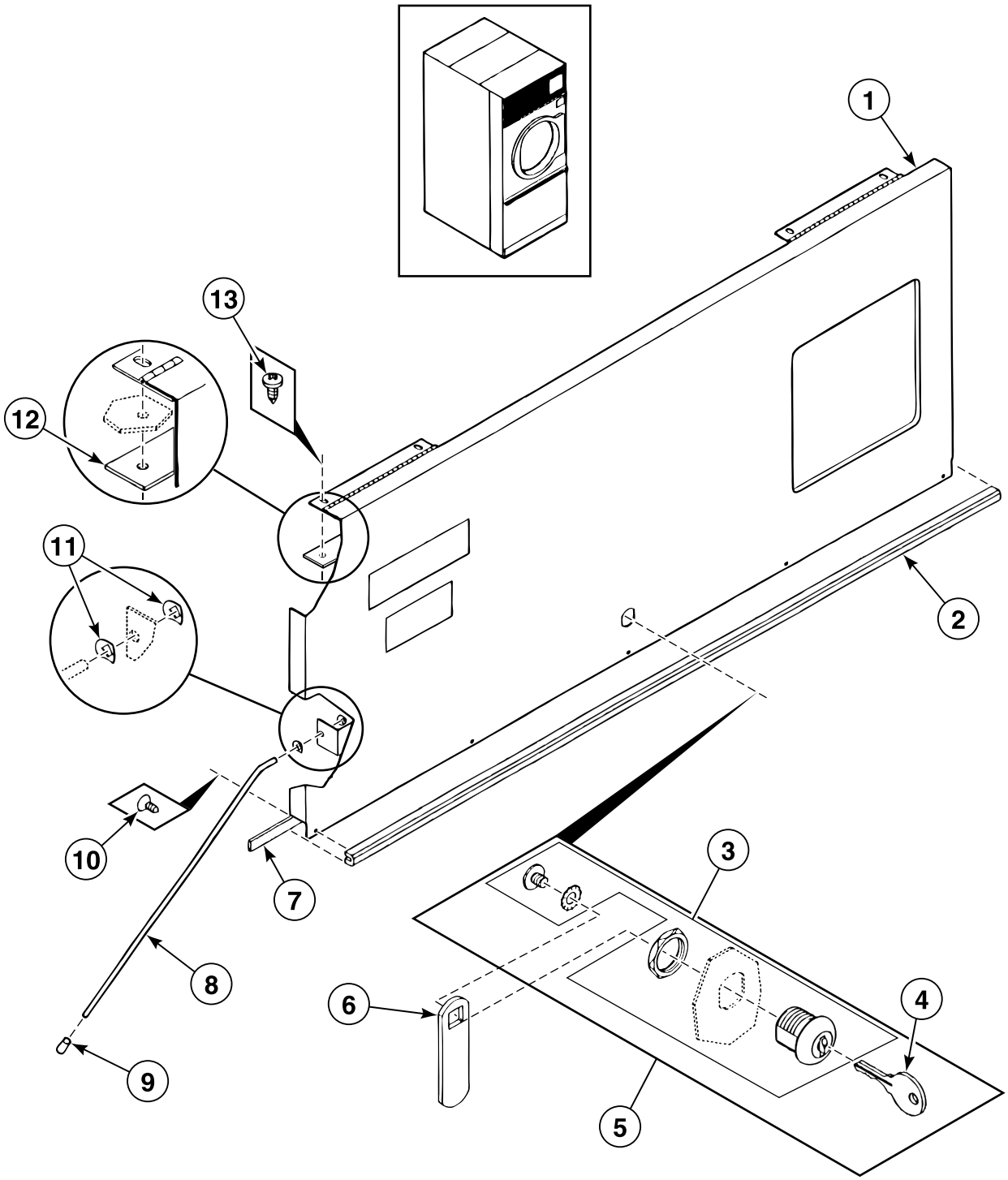

BE000153P_D0924

© Copyright, Alliance Laundry Systems LLC – DO NOT COPY or TRANSMIT

Top Front Panel

REF	PART NO.	DESCRIPTION	COMMENTS
1	254/CSA01/416	Front Panel	Model DR20-Z
	254/CSA01/408	Front Panel	Model DR30-Z
	254/TU015/278	Front Panel	Model DR50-Z
	254/CSA01/511	Front Panel	Model DR75-Z
2	254/CA000/856	Fender Panel	Model DR20-Z
	254/CA000/855	Fender Panel	Model DR30-Z
	254/CA000/857	Fender Panel	Model DR50-Z
	254/CA000/858	Fender Panel	Model DR75-Z
3	254/LA000/121	Lock	Models DR50-Z and DR75-Z
4	254/LA000/119	Key	Models DR50-Z and DR75-Z
5	254/LA000/121	Lock	Models DR20-Z and DR30-Z
6	254/LA011/941	Lock	
7	254/TU002/853	Draught Band	Models DR20-Z and DR30-Z
	254/CA013/098	Draught Band	Models DR50-Z and DR75-Z
8	254/CA010/085	Axle	
	254/TU005/739	Axle	
9	254/CA000/617	Cap	
10	254/SB000/936	Screw	Models DR20-Z and DR30-Z
	254/SB000/951	Screw	Models DR50-Z and DR75-Z
11	254/SB000/971	Key	
12	254/00048/00	Plate Assembly	
13	254/TU007/733	Screw	

© Copyright, Alliance Laundry Systems LLC – DO NOT COPY or TRANSMIT

Middle Front Panel

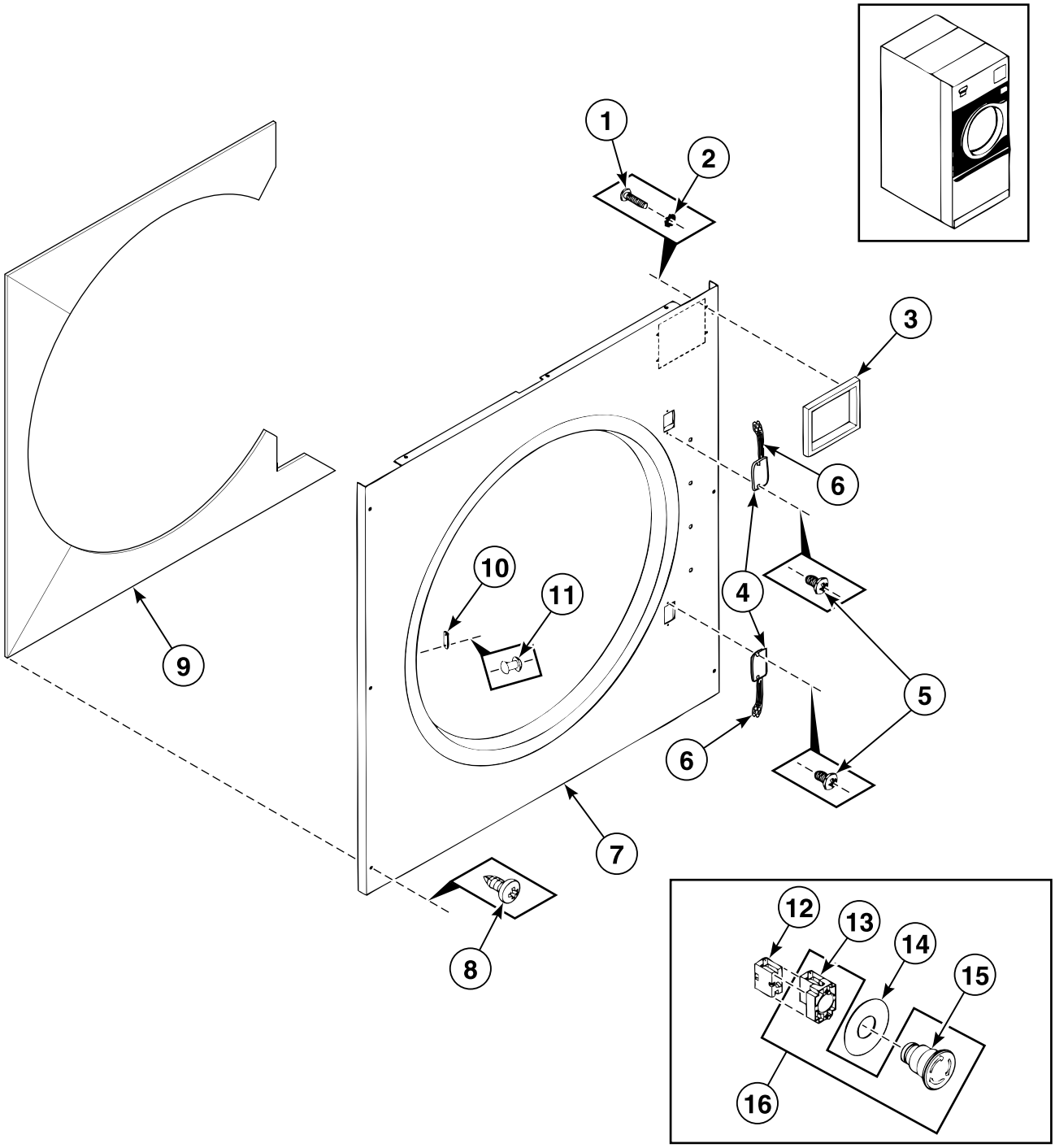

BE000149BP_D0924

© Copyright, Alliance Laundry Systems LLC – DO NOT COPY or TRANSMIT

Middle Front Panel

REF	PART NO.	DESCRIPTION	COMMENTS
1	254/SB000/924	Screw	
2	254/SB000/938	Washer	
3	254/CA000/699	Coin Box	
4	254/00017/00	Magnetic Switch Holder	
5	254/SB000/975	Screw	
6	254/ESA00/862	Reed Switch Assembly	
7	254/CSA01/524	Panel	Model DR75-Z; Coin
	254/CSA15/61W	Panel	Model DR20-Z; OPL
	254/CSA15/64W	Panel	Model DR30-Z; Coin
	254/CSA15/68W	Panel	Model DR20-Z; Coin
	254/TU014/532	Panel	Model DR75-Z; OPL
	254/TU014/951	Panel	Model DR50-Z; OPL
	254/TU015/050	Panel	Model DR50-Z; Coin
	254/TU145/44W	Panel	Model DR30-Z; OPL
8	254/TU007/733	Screw	
9	254/CA000/676	Insulation Panel	Model DR30-Z
	254/TU014/991	Insulation Panel	Models DR50-Z and DR75-Z
	254/TU014/992	Insulation Panel	Model DR20-Z
10	254/TU002/876	Lock	
11	254/TU003/213	Rivet	
12	209/00099/06	Contact Switch	Models DR50-Z and DR75-Z
	209/00099/26	Contact Switch	Models DR20-Z and DR30-Z
13	209/00099/05	Contact	Models DR50-Z and DR75-Z
14	209/00520/00	Telem Sticker	
15	209/00248/00	Mushroom Pushbutton	Models DR50-Z and DR75-Z
16	209/00248/20	Mushroom Pushbutton	Models DR20-Z and DR30-Z

© Copyright, Alliance Laundry Systems LLC – DO NOT COPY or TRANSMIT

Door Assembly

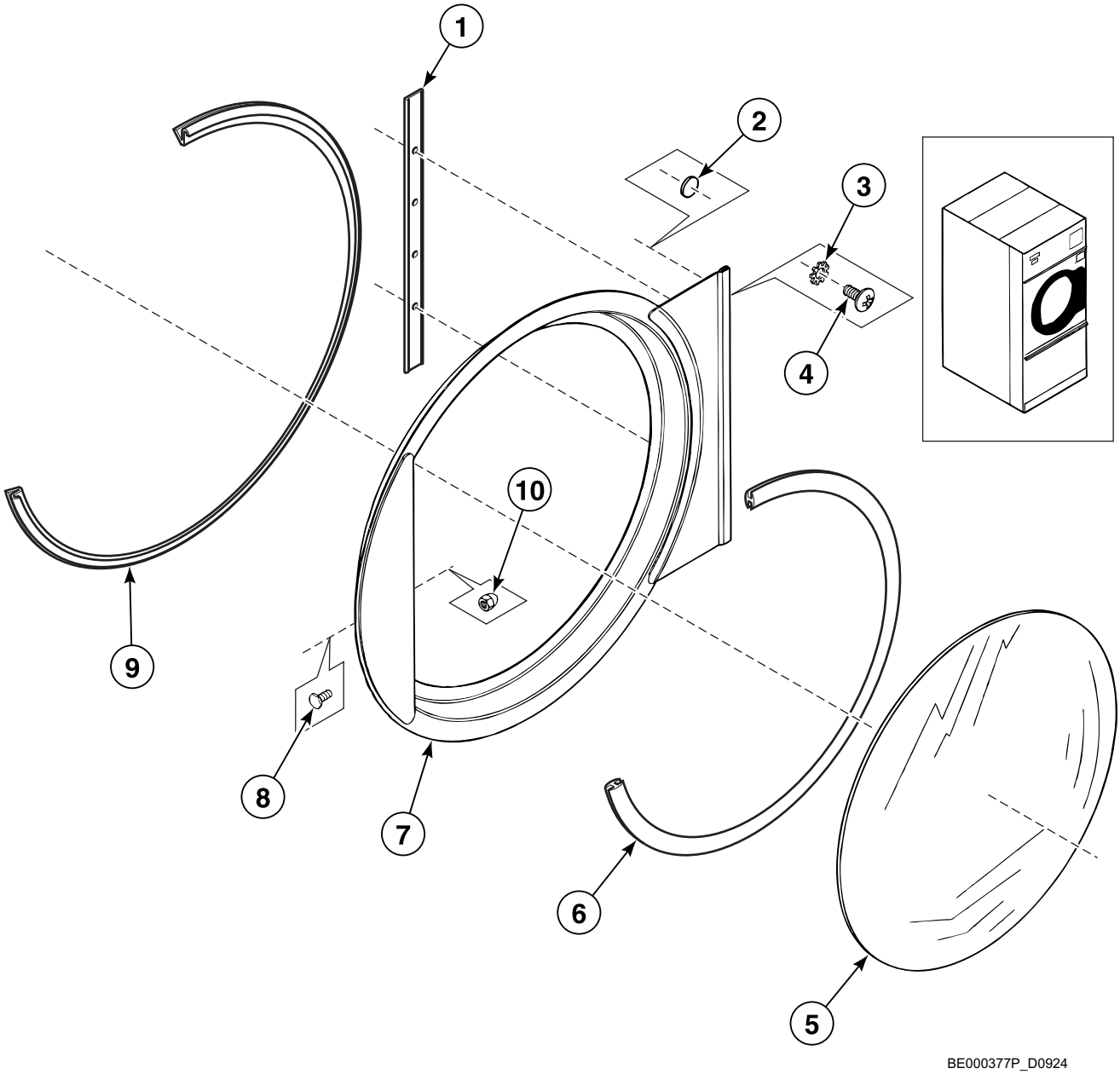

© Copyright, Alliance Laundry Systems LLC – DO NOT COPY or TRANSMIT

Door Assembly

REF	PART NO.	DESCRIPTION	COMMENTS
1	254/TU015/073	Gasket	
2	254/MD000/337	Reed Switch Magnet	
3	254/SB000/852	Washer	
4	254/SB000/921	Screw	
5	254/TU015/107	Door Glass	
6	254/TU015/108	Door Glass Gasket	
7	254/TU015/076	Door Assembly	
8	254/CA013/218	Screw	
9	254/MD000/360	Door Rim Gasket	
10	254/TU004/840	Nut	

© Copyright, Alliance Laundry Systems LLC – DO NOT COPY or TRANSMIT

Lower Front Panel

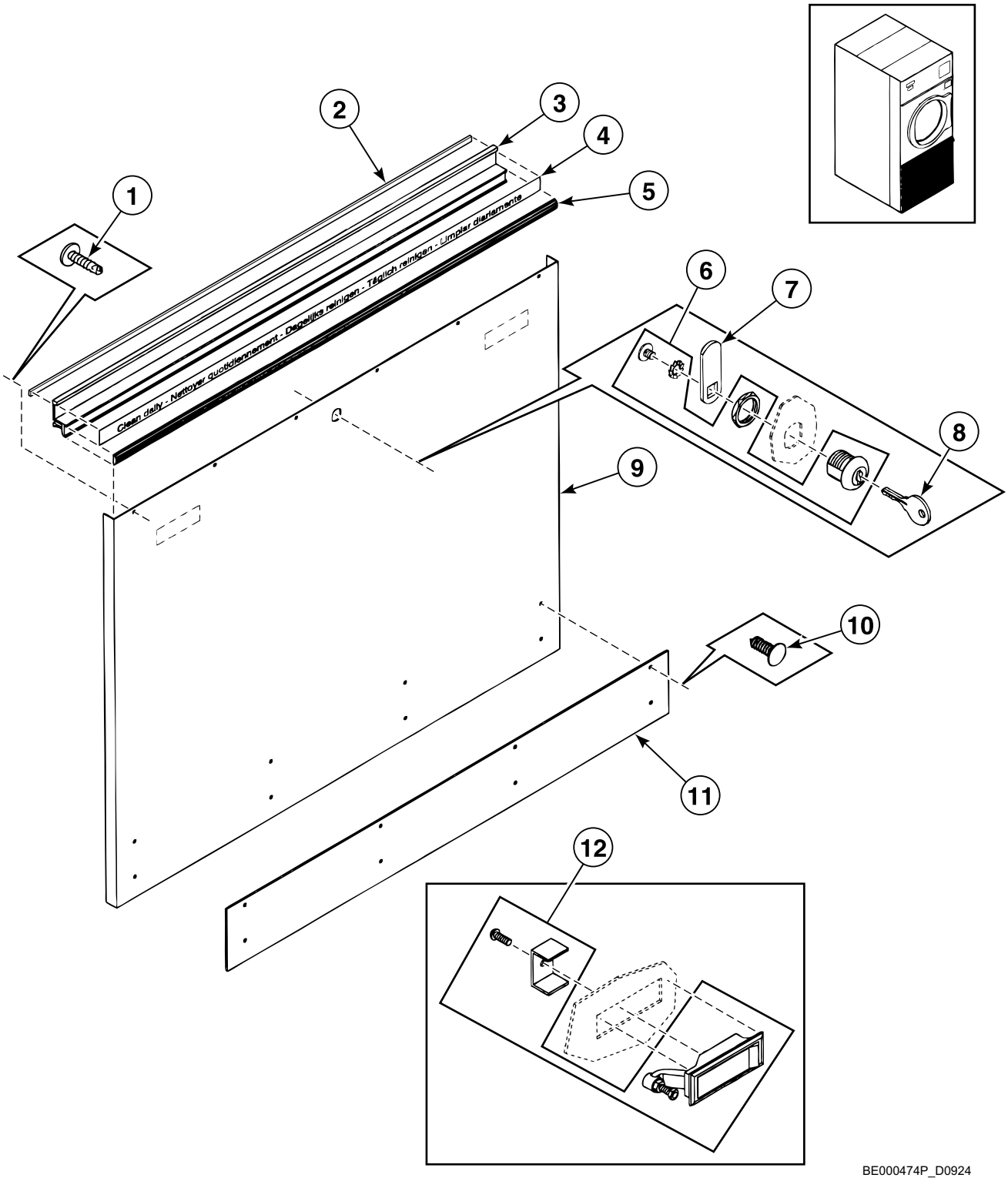

© Copyright, Alliance Laundry Systems LLC – DO NOT COPY or TRANSMIT

Lower Front Panel

REF	PART NO.	DESCRIPTION	COMMENTS
1	254/TU007/733	Screw	
2	254/TU002/853	Draught Band	
3	254/CA000/645	Door Trim	Model DR20-Z
	254/CA000/646	Door Trim	Model DR30-Z
	254/CA000/647	Door Trim	Model DR50-Z
	254/CA000/697	Door Trim	Model DR75-Z
4	254/00019/00	Clean Lint Screen Label	
5	254/CA000/655	Fender	
6	254/LA000/121	Lock	
7	254/CA011/359	Cam Lock	
8	254/00000/119	Key	
9	254/CSA01/516	Front Panel	Model DR75-Z; OPL
	254/CSA01/593	Front Panel	Model DR75-Z; Coin
	254/CSA10/97W	Front Panel	Model DR20-Z
	254/CSA10/98W	Front Panel	Model DR20-Z
	254/CSA13/83W	Front Panel	Model DR30-Z
	254/CSA13/87W	Front Panel	Model DR30-Z
	254/TU014/954	Front Panel	Model DR50-Z
	254/TU015/045	Front Panel	Model DR50-Z
10	254/SB000/949	Screw	
11	254/CA000/833	Door Fender	Model DR30-Z
	254/CA000/838	Door Fender	Model DR50-Z
	254/CA000/839	Door Fender	Model DR75-Z
	254/CSA00/828	Door Fender	Model DR20-Z
12	254/LA000/124	Lock Hatch Assembly	

© Copyright, Alliance Laundry Systems LLC – DO NOT COPY or TRANSMIT

Operating Door - OPL DX3S and DX3RS Models

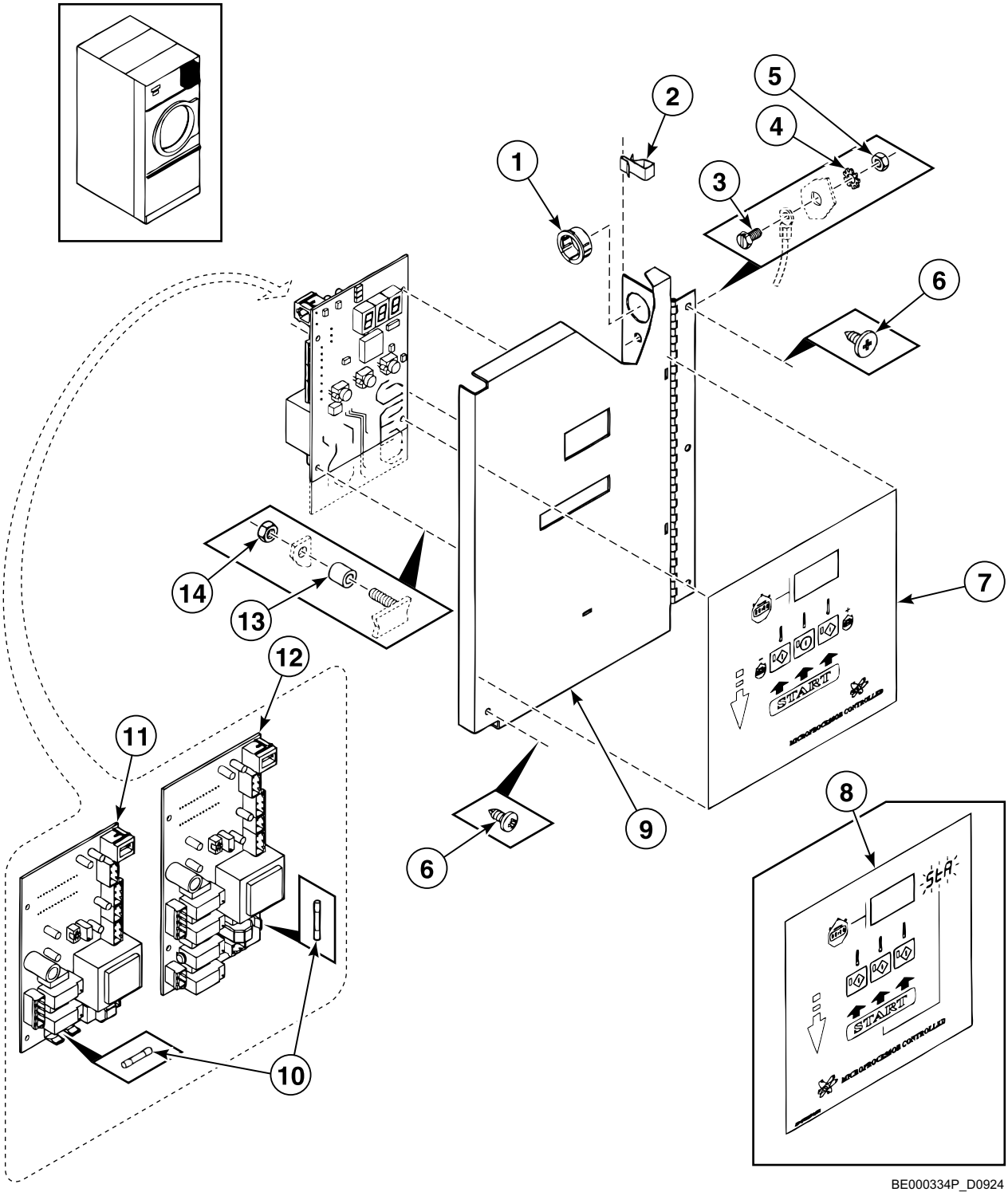

BE000334P_D0924

© Copyright, Alliance Laundry Systems LLC – DO NOT COPY or TRANSMIT

Operating Door - OPL DX3S and DX3RS Models

REF	PART NO.	DESCRIPTION	COMMENTS
1	254/SB000/868	Duct	
2	254/EA000/395	Wiring Clip	
3	254/SB000/898	Bolt	
4	254/TU011/613	Washer	
5	254/TU002/842	Nut	
6	254/SB000/836	Screw	
7	254/00069/00	Keypad Label	
8	254/00021/00	Operating Touchpad	
9	254/CSA01/529	Operating Door	
10	209/00506/00	Fuse	
11	254/00066/00	Control Board	
12	254/00067/00	Control Board	
13	254/TU014/701	Spacer	
14	254/TUD00/367	Nut	

© Copyright, Alliance Laundry Systems LLC – DO NOT COPY or TRANSMIT

Operating Door - Coin DX3S and DX3RS Models

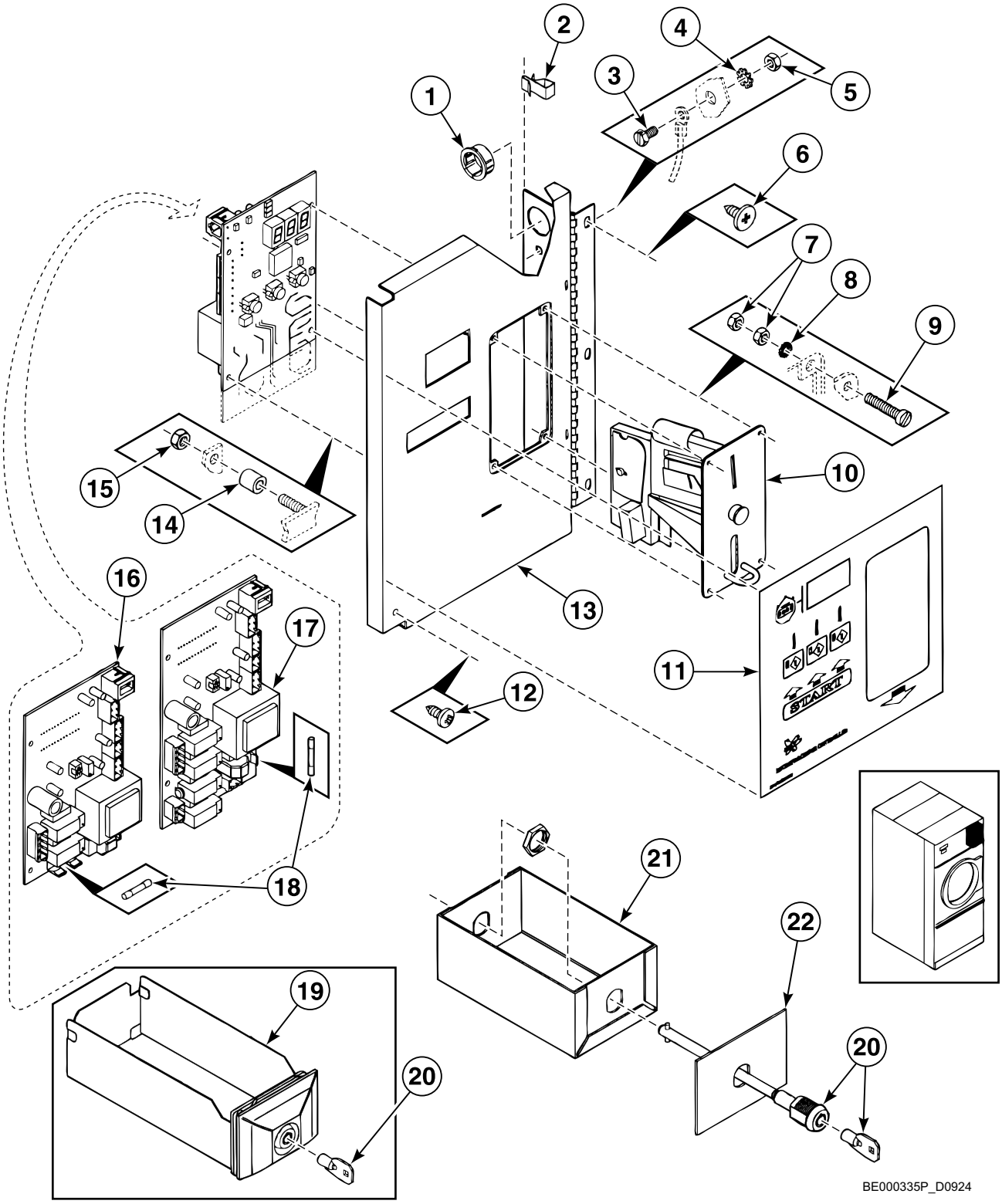

© Copyright, Alliance Laundry Systems LLC – DO NOT COPY or TRANSMIT

Operating Door - Coin DX3S and DX3RS Models

REF	PART NO.	DESCRIPTION	COMMENTS
1	254/SB000/868	Duct	
2	254/EA000/395	Wiring Clip	
3	254/SB000/898	Bolt	
4	254/TU011/613	Washer	
5	254/TU002/842	Nut	
6	254/SB000/836	Screw	
7	204/00008/00	Nut	
8	203/00007/00	Washer	
9	207/00108/00	Screw	
10	209/00305/00	Coin Meter	
11	254/00033/00	Keypad Label	
12	254/TU007/733	Screw	
13	254/CSA01/530	Operating Door	
14	254/TU014/701	Spacer	
15	254/TUD00/367	Nut	
16	254/00066/00	Control Board	
17	254/00067/00	Control Board	
18	209/00506/00	Fuse	
19	254/TU009/225	Coin Vault	
20	254/LA000/401	Lock	
21	254/CSA00/753	Coin Box	
22	254/CA011/265	Front Plate	

© Copyright, Alliance Laundry Systems LLC – DO NOT COPY or TRANSMIT

Operating Door - ProHC OPL Models

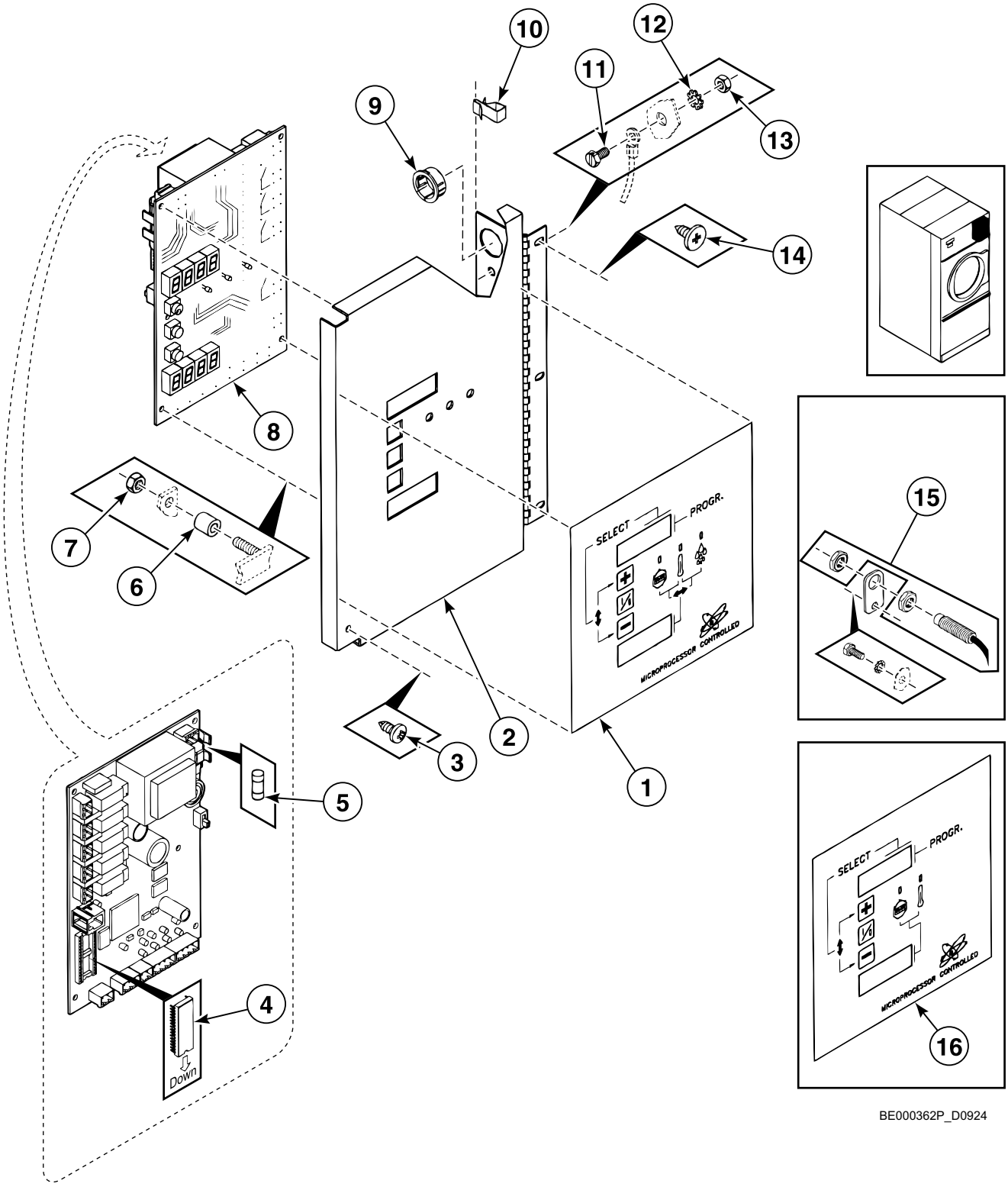

BE000362P_D0924

© Copyright, Alliance Laundry Systems LLC – DO NOT COPY or TRANSMIT

Operating Door - ProHC OPL Models

REF	PART NO.	DESCRIPTION	COMMENTS
1	254/00018/00	Control Label	
2	254/CSA01/535	Operating Door	
3	254/TU007/733	Screw	
4	209/00266/01	Eprom	
5	209/00507/00	Fuse	
6	254/TU014/701	Spacer	
7	254/TUD00/367	Nut	
8	254/00070/00	Control Board	
9	254/SB000/868	Duct	
10	254/EA000/395	Wiring Clip	
11	254/SB000/898	Bolt	
12	254/TU011/613	Washer	
13	254/TU002/842	Nut	
14	254/SB000/836	Screw	
15	254/TU014/414	Rotation Sensor	
16	254/00039/00	Operating Touchpad	

© Copyright, Alliance Laundry Systems LLC – DO NOT COPY or TRANSMIT

Basket Assembly - DR20 Models

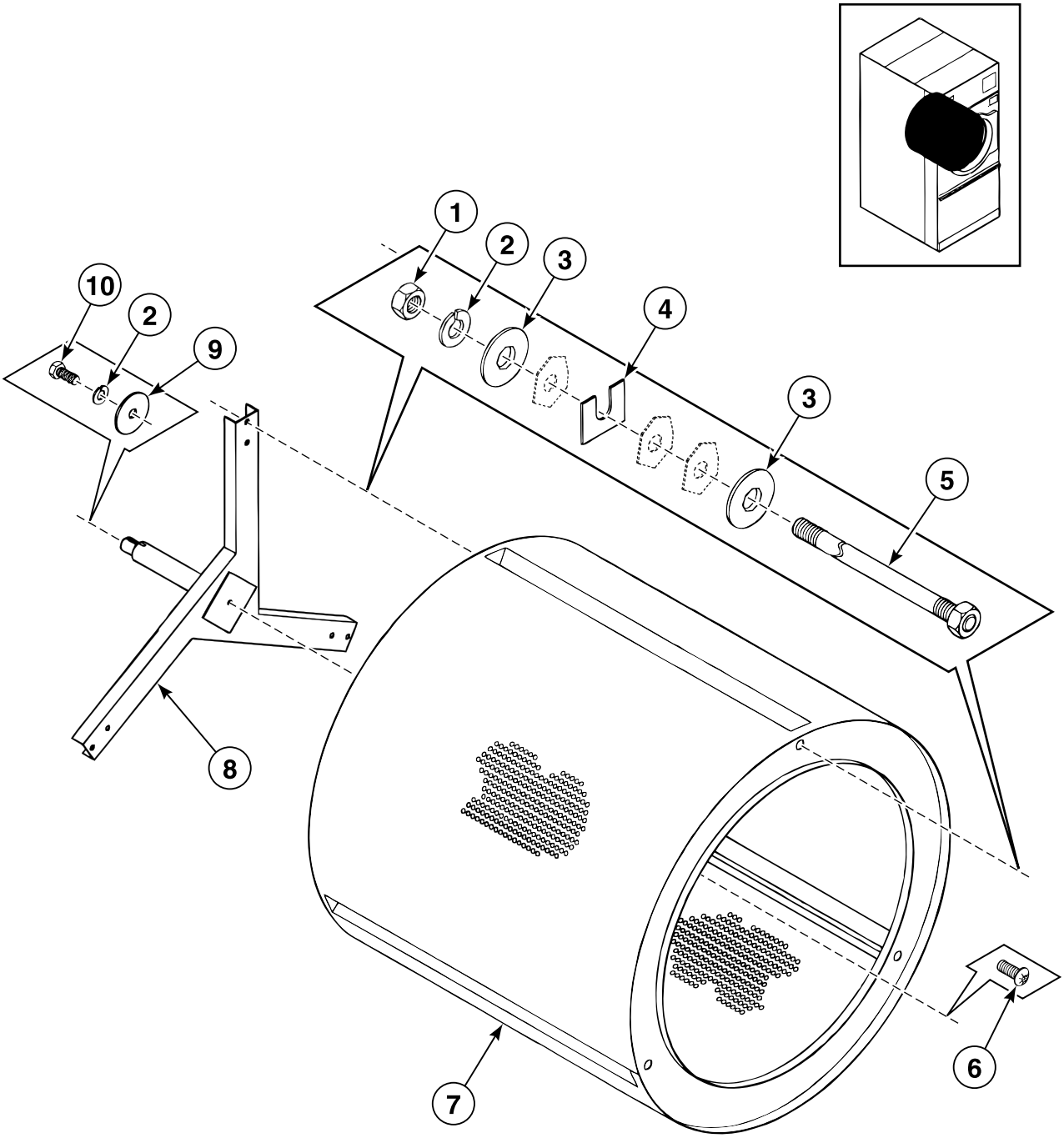

BE000480P_D0924

© Copyright, Alliance Laundry Systems LLC – DO NOT COPY or TRANSMIT

Basket Assembly - DR20 Models

REF	PART NO.	DESCRIPTION	COMMENTS
1	254/C0000/249	Nut	
2	254/TU002/814	Washer	
3	254/VSB00/130	Washer	
4	254/TU007/006	Reinforcement Bracket	
5	254/DA000/418	Bar Drum	
6	254/TU007/733	Screw	
7	254/TUS13/987	Drum	
8	254/TU015/087	Trunnion	
9	254/SB000/843	Washer	
10	254/TU005/439	Bolt	

© Copyright, Alliance Laundry Systems LLC – DO NOT COPY or TRANSMIT

Basket Assembly - DR30 Models

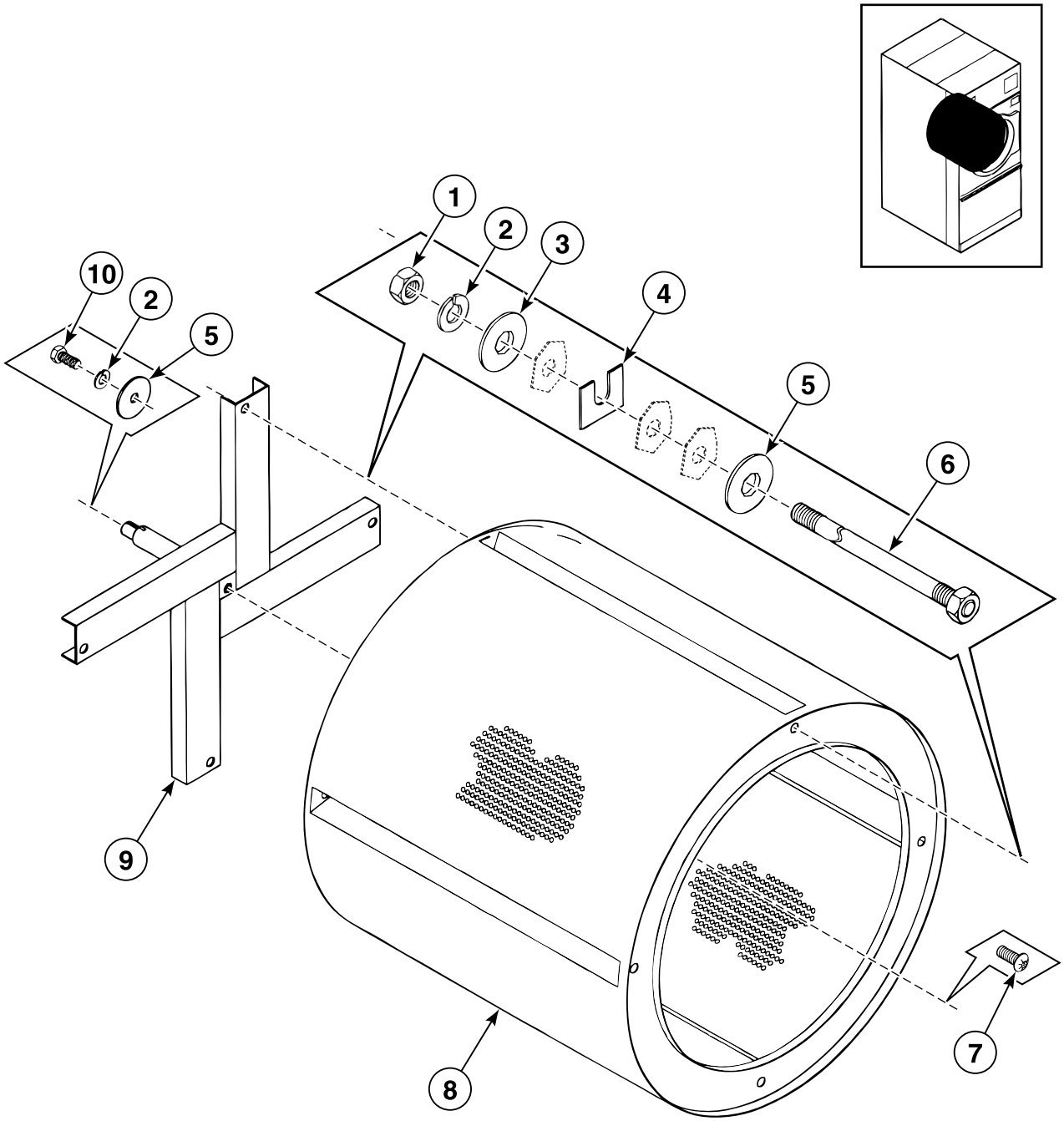

© Copyright, Alliance Laundry Systems LLC – DO NOT COPY or TRANSMIT

Basket Assembly - DR30 Models

REF	PART NO.	DESCRIPTION	COMMENTS
1	254/C0000/249	Nut	
2	254/TU002/814	Washer	
3	254/VSB00/130	Washer	
4	254/TU007/006	Reinforcement Bracket	
5	254/SB000/843	Washer	
6	254/DA000/445	Bolt	
7	254/SB000/965	Screw	
	254/TU002/818	Screw	
8	254/CSA01/538	Drum	
9	254/TU015/220	Trunnion	
10	254/TU005/439	Bolt	

© Copyright, Alliance Laundry Systems LLC – DO NOT COPY or TRANSMIT

Basket Assembly -DR50 Models

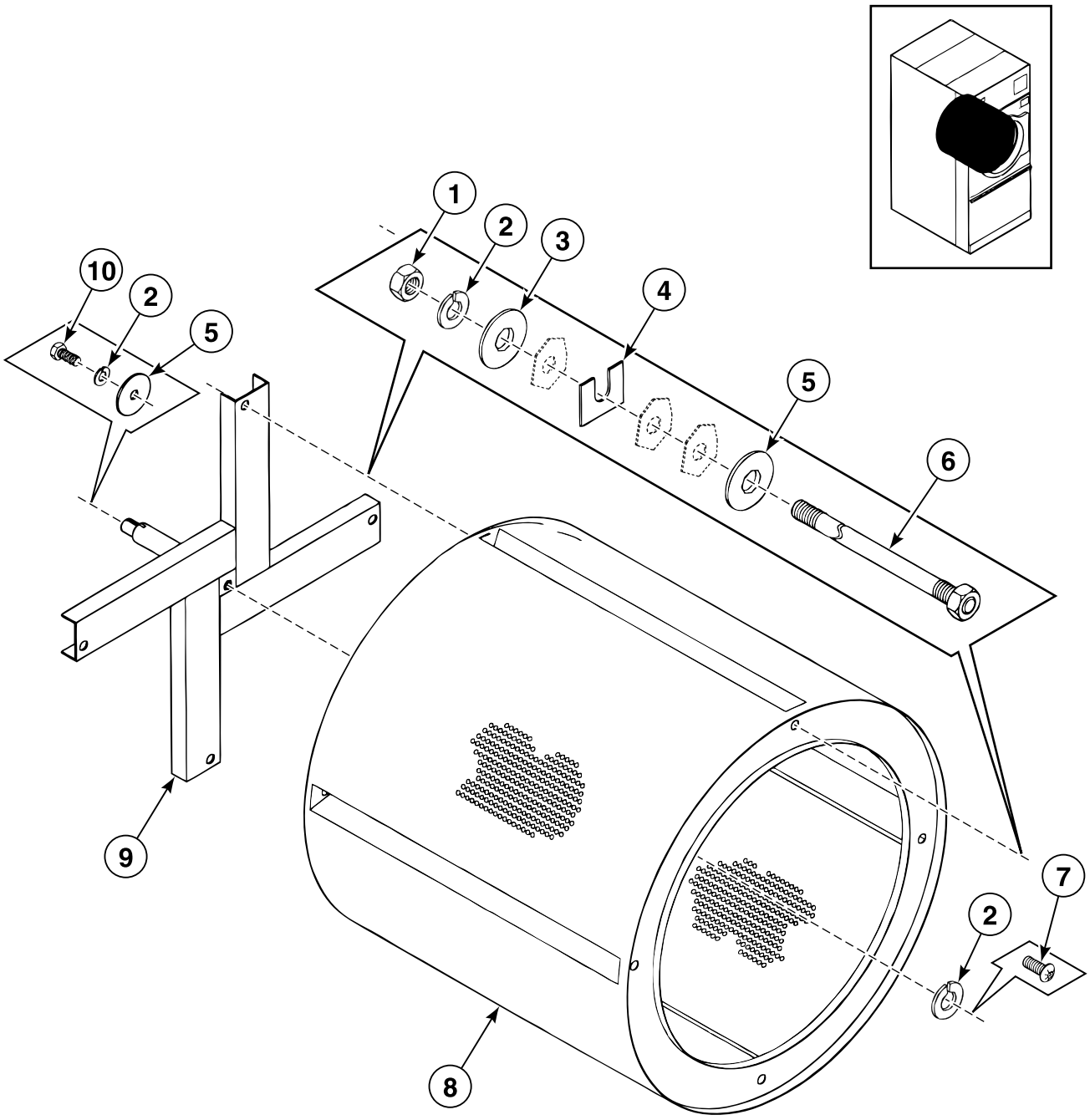

© Copyright, Alliance Laundry Systems LLC – DO NOT COPY or TRANSMIT

Basket Assembly -DR50 Models

REF	PART NO.	DESCRIPTION	COMMENTS
1	254/C0000/249	Nut	
2	254/TU002/814	Washer	
3	254/VSB00/130	Washer	
4	254/TU007/006	Reinforcement Bracket	
5	254/SB000/843	Washer	
6	254/DA011/249	Bolt	
7	254/SB000/965	Screw	
8	254/CSA01/540	Drum	
9	254/TU014/891	Trunnion	
10	254/TU005/439	Bolt	

© Copyright, Alliance Laundry Systems LLC – DO NOT COPY or TRANSMIT

Basket Assembly - DR75 Models

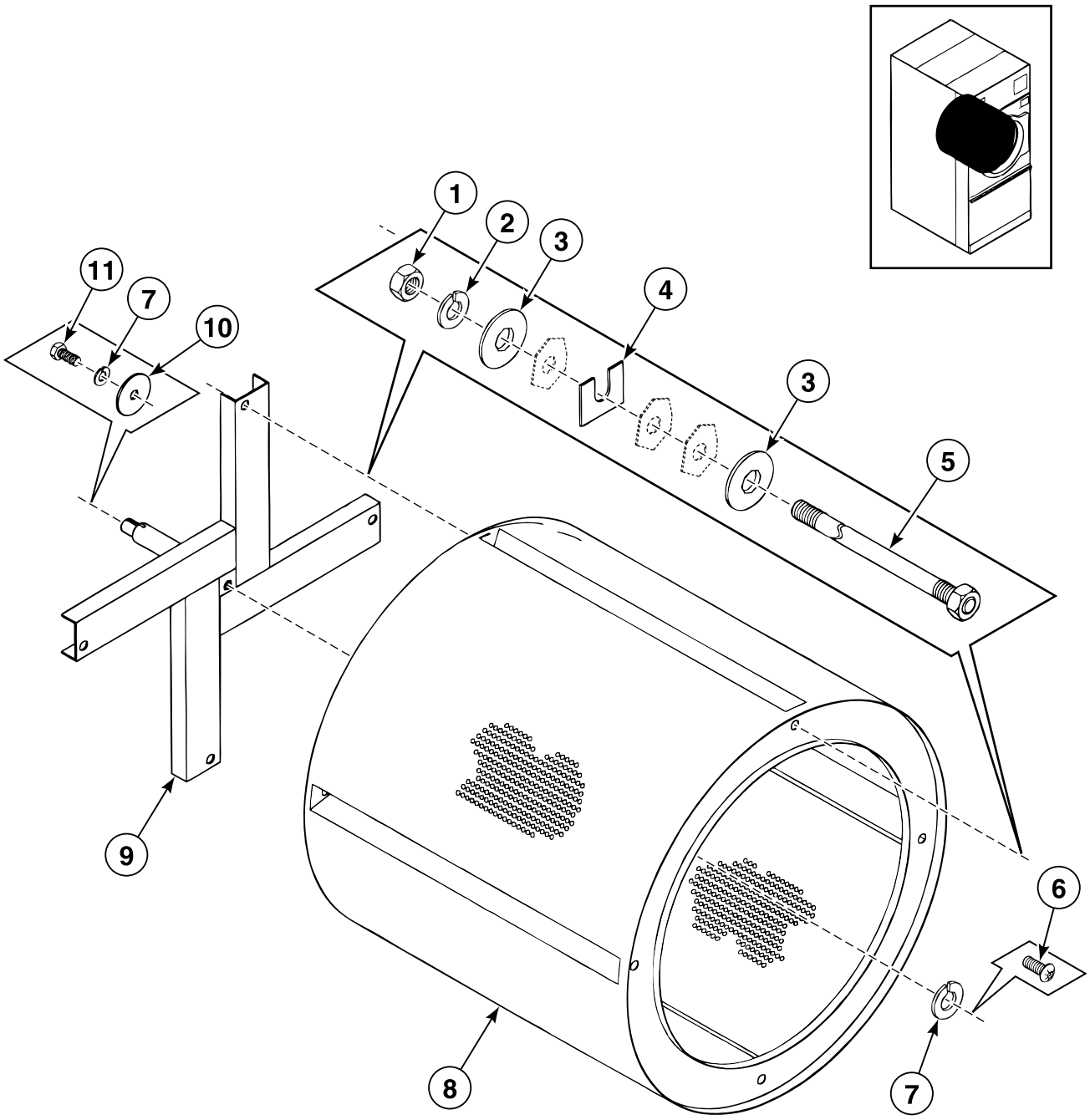

TMB3100P_D0924

© Copyright, Alliance Laundry Systems LLC – DO NOT COPY or TRANSMIT

Basket Assembly - DR75 Models

REF	PART NO.	DESCRIPTION	COMMENTS
1	254/TU002/882	Nut	
2	254/TU002/831	Washer	
3	254/TU002/883	Washer	
4	254/TU007/006	Reinforcement Bracket	
5	254/TU008/297	Bolt	
6	254/SB000/965	Screw	
7	254/TU002/814	Washer	
8	254/CSA01/695	Drum	
9	254/TU014/865	Trunnion	
10	254/SB000/843	Washer	
11	254/TU005/439	Bolt	

© Copyright, Alliance Laundry Systems LLC – DO NOT COPY or TRANSMIT

Cabinet Back

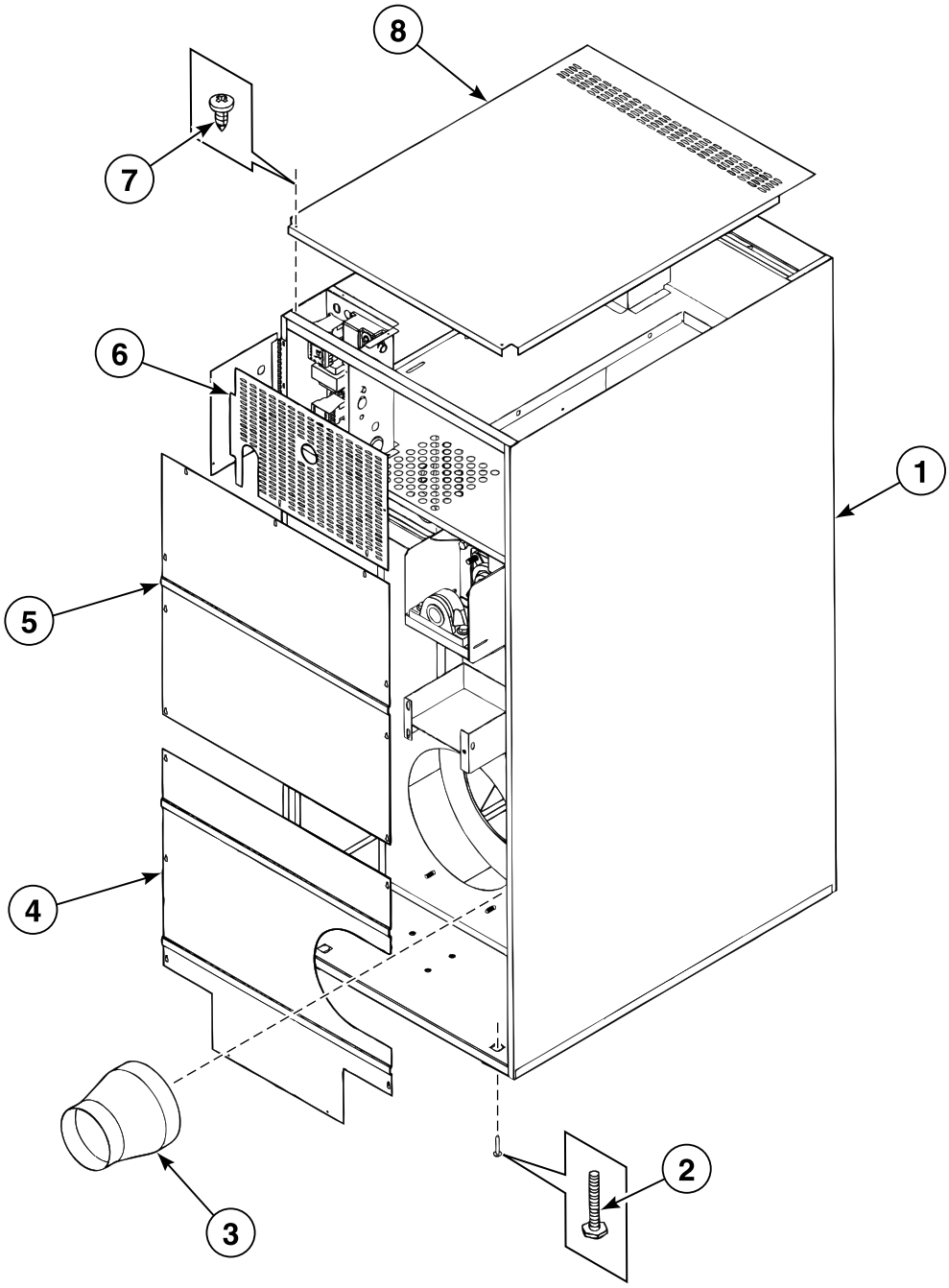

BE000481P_D0924

© Copyright, Alliance Laundry Systems LLC – DO NOT COPY or TRANSMIT

Cabinet Back

REF	PART NO.	DESCRIPTION	COMMENTS
1	254/TU015/200	Side Panel	Model DR30-Z
	254/TU015/139	Side Panel	Model DR20-Z
	254/TU014/819	Side Panel	Models DR50-Z and DR75-Z
	254/TU014/900	Side Panel	Models DR50-Z and DR75-Z
2	254/TU003/211	Leveling Leg	
3	254/TU015/234	Valve	Models DR20-Z and DR30-Z
	N/A	Valve	Models DR50-Z and DR75-Z
4	254/TU015/231	Lower Back Panel	Models DR20-Z and DR30-Z
	254/TU015/151	Lower Back Panel	Models DR20-Z and DR30-Z
	254/TU015/062	Lower Back Panel	Models DR50-Z and DR75-Z
	254/CA013/259	Lower Back Panel	Models DR50-Z and DR75-Z
5	254/TU015/230	Upper Back Panel	Models DR20-Z and DR30-Z
	254/TU015/150	Upper Back Panel	Models DR20-Z and DR30-Z
	254/TU015/061	Upper Back Panel	Models DR50-Z and DR75-Z
	254/CA013/272	Upper Back Panel	Models DR50-Z and DR75-Z
6	254/TU014/642	Vent Panel	Models DR20-Z and DR30-Z
	254/TU014/651	Vent Panel	Models DR20-Z and DR30-Z
	254/TU014/652	Vent Panel	Model DR50-Z
	254/TU014/653	Vent Panel	Model DR75-Z
7	254/TU007/733	Screw	
8	254/TU015/152	Top Panel	Models DR20-Z and DR30-Z
	254/TU015/228	Top Panel	Models DR20-Z and DR30-Z
	254/TU015/183	Top Panel	Models DR50-Z and DR75-Z
	254/TU014/849	Top Panel	Models DR50-Z and DR75-Z

N/A = Part no longer available

© Copyright, Alliance Laundry Systems LLC – DO NOT COPY or TRANSMIT

Draught Valve

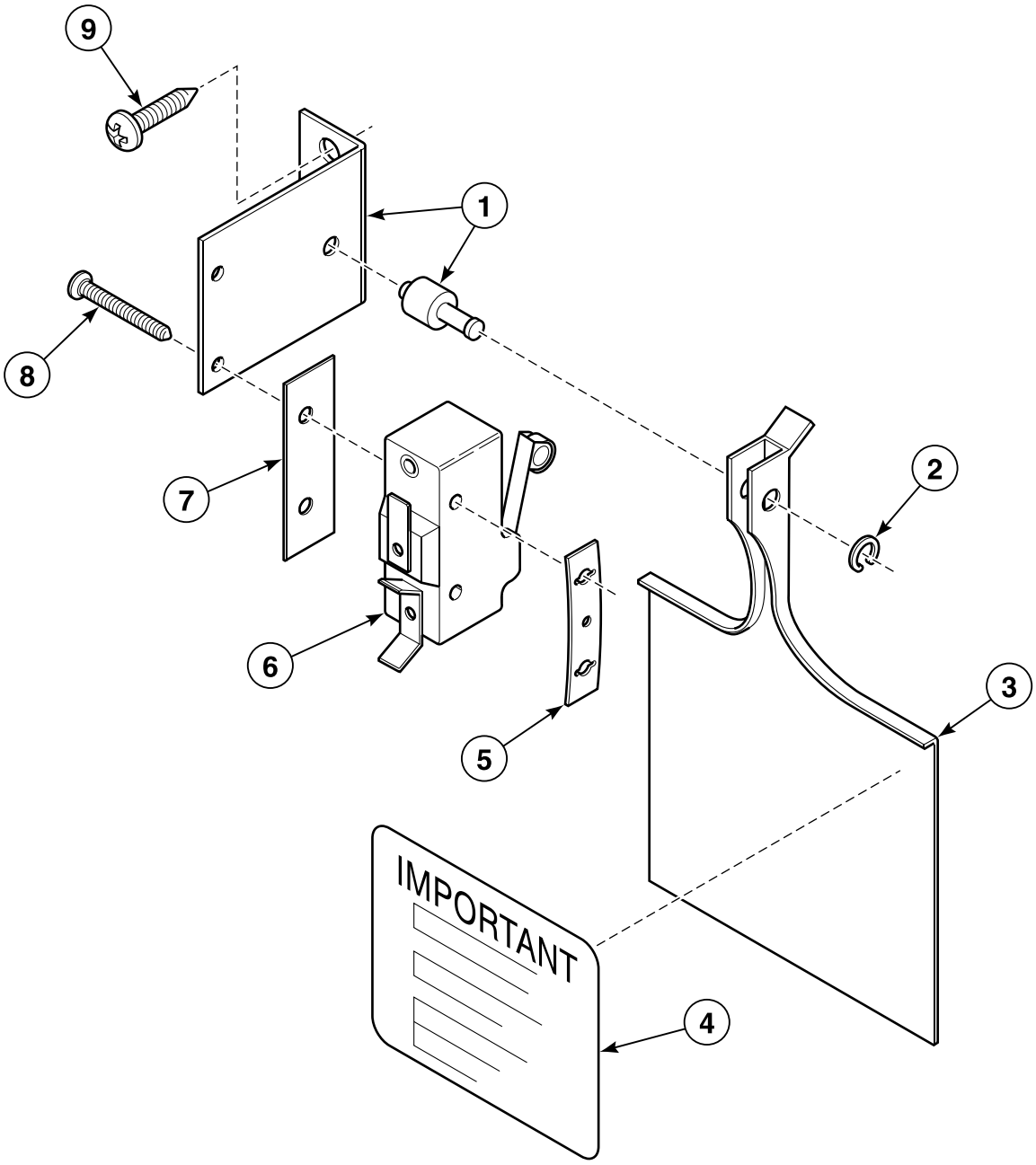

BE000483P_D0924

© Copyright, Alliance Laundry Systems LLC – DO NOT COPY or TRANSMIT

Draught Valve

REF	PART NO.	DESCRIPTION	COMMENTS
1	254/TU008/171	Air Switch Bracket	
2	254/F0000/888	E-Ring	
3	254/TU002/463	Actuator Arm	
4	254/TU003/476	Air Switch Decal	
5	254/TU001/771	Nut	
6	254/TU008/155	Air Switch	
7	254/TU001/770	Insulator	
8	254/TU003/219	Screw	
9	254/TU007/733	Screw	

© Copyright, Alliance Laundry Systems LLC – DO NOT COPY or TRANSMIT

Drum Drive - Reduction

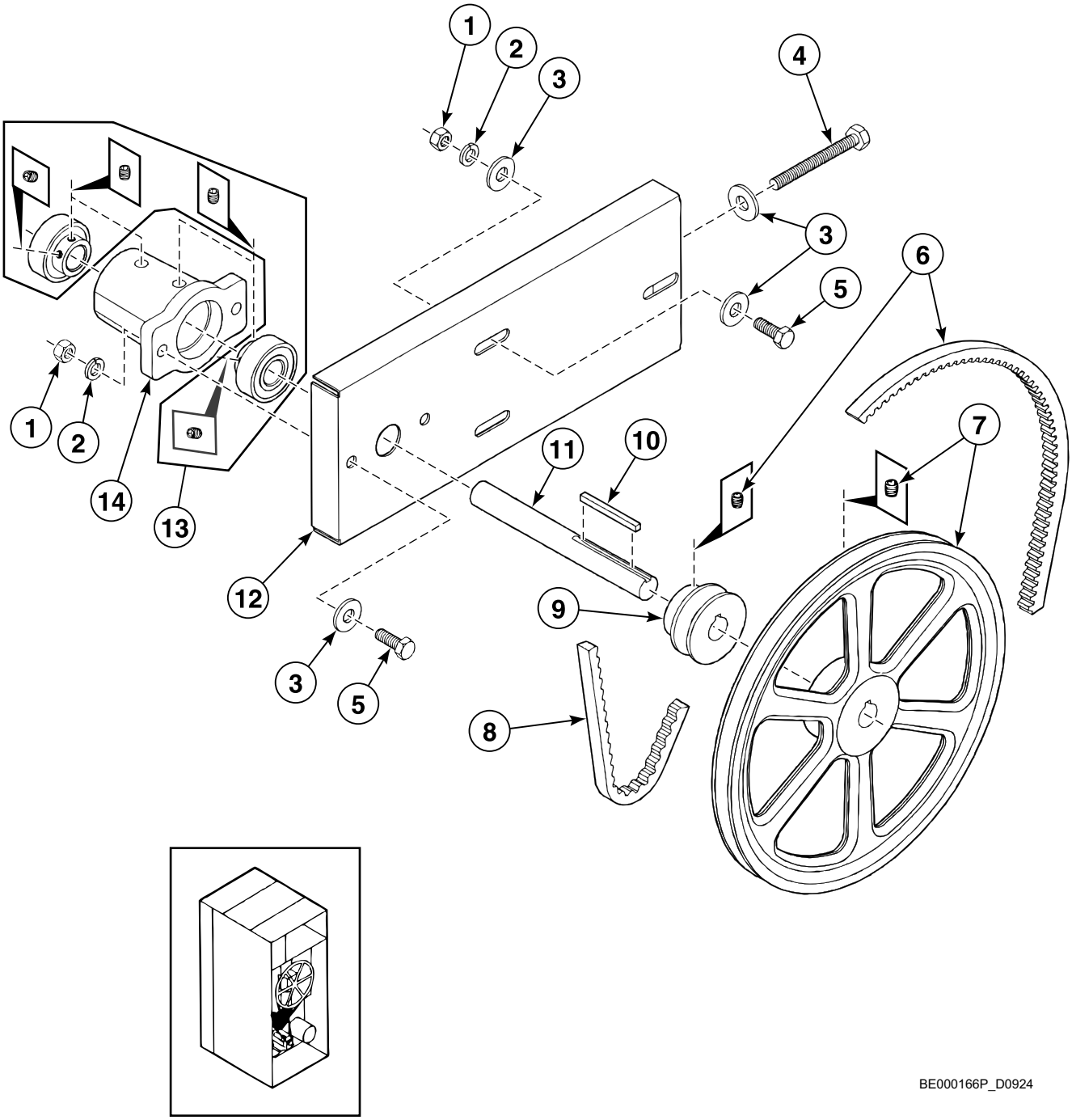

© Copyright, Alliance Laundry Systems LLC – DO NOT COPY or TRANSMIT

Drum Drive - Reduction

REF	PART NO.	DESCRIPTION	COMMENTS
1	254/C0000/249	Nut	
2	254/TU002/814	Washer	
3	254/VSB00/130	Washer	
4	254/SB000/935	Bolt	
5	254/TU005/439	Bolt	
6	254/DA000/494	Belt	Model DR50-Z; Non-reversing
	254/DA000/521	Belt	Models DR20-Z and DR30-Z
	254/DA000/522	Belt	Model DR20-Z
	254/DA000/523	Belt	Model DR30-Z
	254/DA000/525	Belt	Model DR75-Z; Non-reversing
	254/DA000/533	Belt	
	254/DA011/908	Belt	Model DR75-Z; Reversing
	254/TU015/206	Belt	
7	254/DA000/531	Pulley	
8	254/DA000/497	Belt	Models DR50-Z and DR75-Z
	254/DA000/523	Belt	Model DR30-Z
	254/DA000/533	Belt	
	254/DA011/917	Belt	
9	254/TU014/691	Sheave	
10	254/TUD00/187	Key	
11	254/DA011/711	Idler Shaft	
12	254/CA012/059	Plate Assembly	
13	254/DA000/518	Bearing	
14	254/DA000/517	Pulley Housing	

© Copyright, Alliance Laundry Systems LLC – DO NOT COPY or TRANSMIT

Drum Drive - Main Bearing

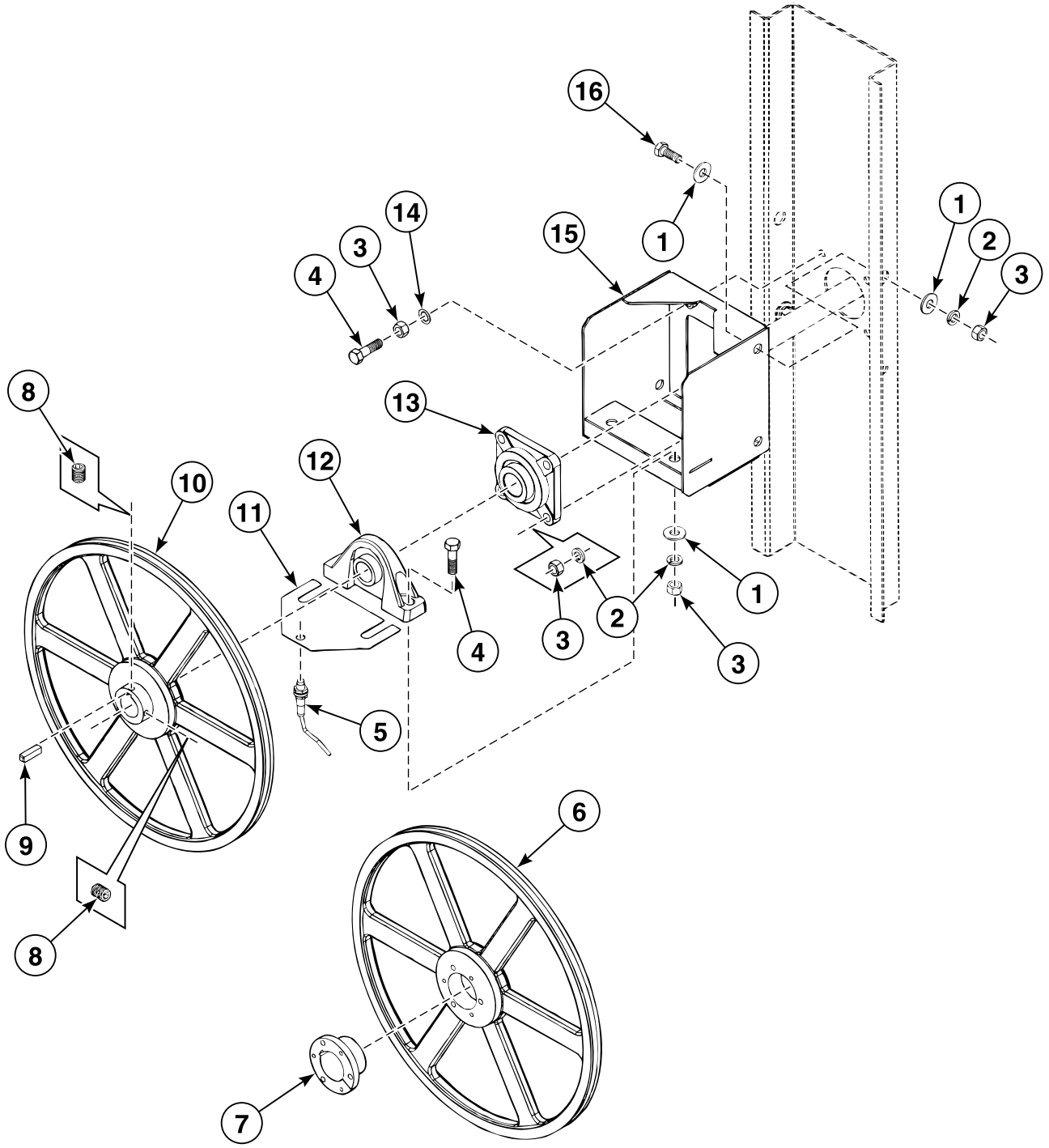

BE000487P_D0924

© Copyright, Alliance Laundry Systems LLC – DO NOT COPY or TRANSMIT

Drum Drive - Main Bearing

REF	PART NO.	DESCRIPTION	COMMENTS
1	254/TU002/883	Washer	
2	254/TU002/831	Washer	
3	254/OP000/233	Nut	
4	254/TU002/195	Bolt	
5	254/TU014/414	Rotation Sensor	
6	254/TU015/157	Nut	
7	254/TU015/153	Washer	Models DR20-Z, DR30-Z and DR50-Z
	254/TU015/154	Washer	Model DR75-Z
8	254/TU010/644	Nut	
9	254/TU015/304	Trommel	
10	254/TU015/173	Belt Pulley	Models DR20-Z, DR30-Z and DR50-Z
	254/TU015/174	Belt Pulley	Model DR75-Z
11	254/TU014/946	Plate	
12	254/TU010/676	Plug	Models DR20-Z, DR30-Z and DR50-Z
	254/TU013/334	Plug	Model DR75-Z
13	254/TU010/850	Trommel	
	254/TU013/335	Trommel	
14	254/OP000/251	Washer	
15	254/TU013/147	Bearing Box Assembly	Model DR20-Z
	254/TUD00/411	Bearing Box Assembly	Models DR30-Z, DR50-Z and DR75-Z
16	254/RC000/347	Screw	

© Copyright, Alliance Laundry Systems LLC – DO NOT COPY or TRANSMIT

Motor, Fan and Drum Drive

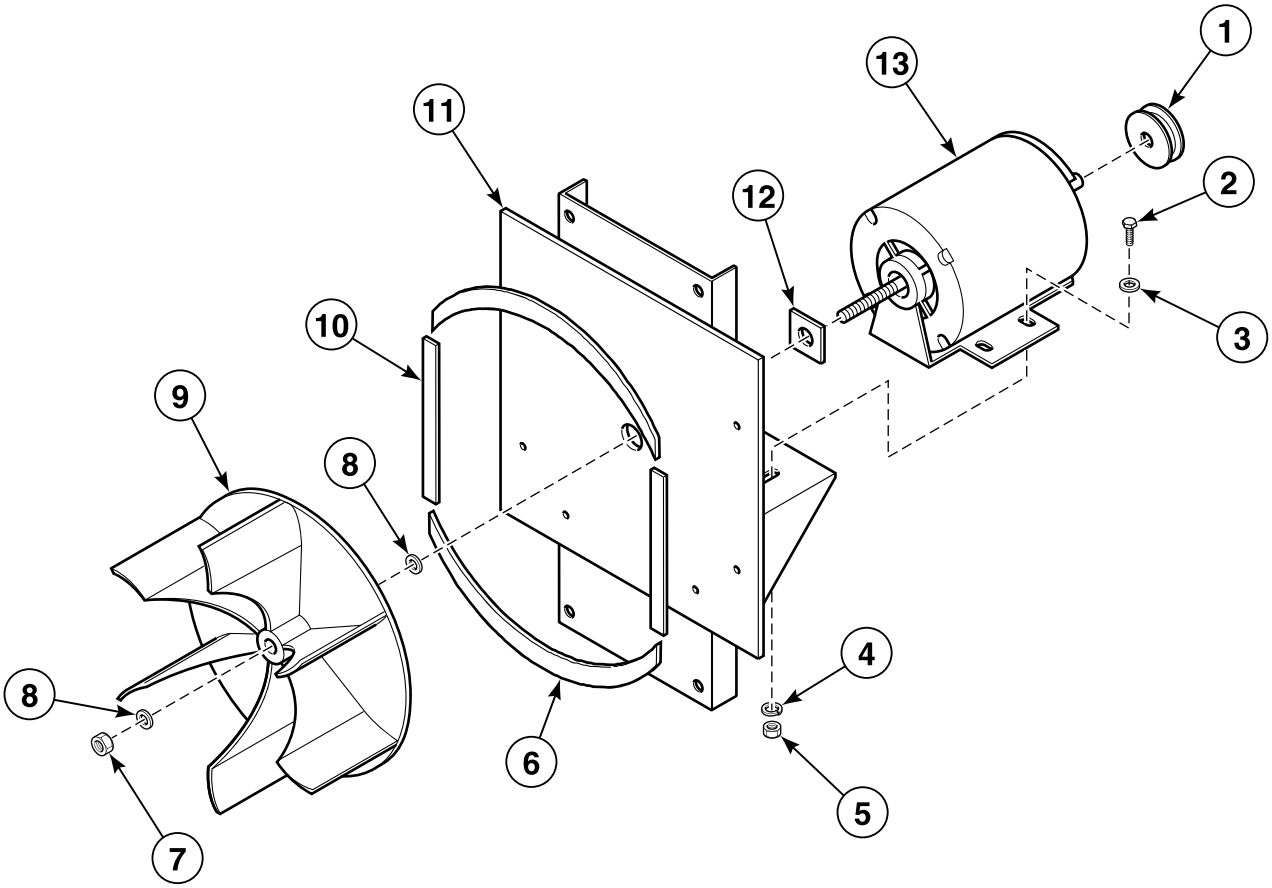

BE000490P_D0924

© Copyright, Alliance Laundry Systems LLC – DO NOT COPY or TRANSMIT

Motor, Fan and Drum Drive

REF	PART NO.	DESCRIPTION	COMMENTS
1	254/DA000/510	Pulley	
	254/DA000/516	Pulley	
	254/TU006/559	Pulley	Models DR50-Z and DR75-Z
	254/TU014/689	Pulley	
	254/TU015/162	Pulley	
	254/TU015/167	Pulley	Models DR50-Z and DR75-Z
2	254/TU005/439	Bolt	
3	254/VSB00/130	Washer	
4	254/TU002/814	Washer	
5	254/C0000/249	Nut	
6	254/TU002/473	Gasket	
7	254/SB000/813	Nut	
8	254/SB000/847	Washer	
9	254/DSA00/773	Fan	
10	254/TU002/474	Gasket	
11	254/DSA00/801	Motor Plate Assembly	Model DR30-Z
	254/TU014/869	Motor Plate Assembly	Models DR50-Z and DR75-Z
	254/TU015/227	Motor Plate Assembly	Model DR20-Z
12	254/DA000/460	Dust Cover	
13	254/DA000/428	Motor Assembly	
	254/DA000/447	Motor Assembly	
	254/DA000/477	Motor Assembly	
	254/DA000/480	Motor Assembly	
	254/DA011/907	Motor Assembly	

© Copyright, Alliance Laundry Systems LLC – DO NOT COPY or TRANSMIT

Motor, Fan and Motor Basket - Reversing Models

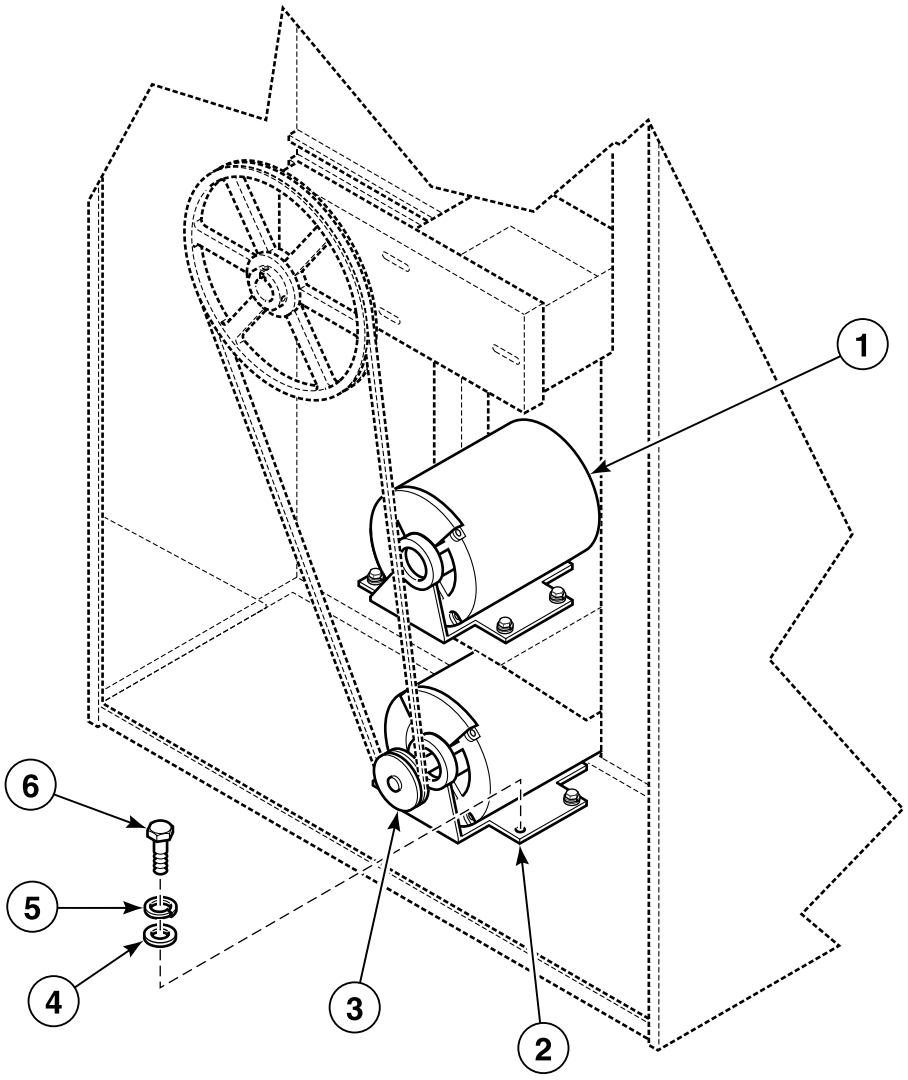

BE000478P_D0924

© Copyright, Alliance Laundry Systems LLC – DO NOT COPY or TRANSMIT

Motor, Fan and Motor Basket - Reversing Models

REF	PART NO.	DESCRIPTION	COMMENTS
1	254/DA000/447	Motor Assembly	
2	254/DA011/909	Motor	
3	254/TU010/998	Pulley	
	254/TU006/559	Pulley	
	254/TU000/690	Pulley	
	254/TU011/184	Pulley	
	254/TU015/167	Pulley	
4	254/VSD00/130	Washer	
5	254/TU002/814	Washer	
6	254/TU005/439	Bolt	

© Copyright, Alliance Laundry Systems LLC – DO NOT COPY or TRANSMIT

Electric Junction Box - Gas Models

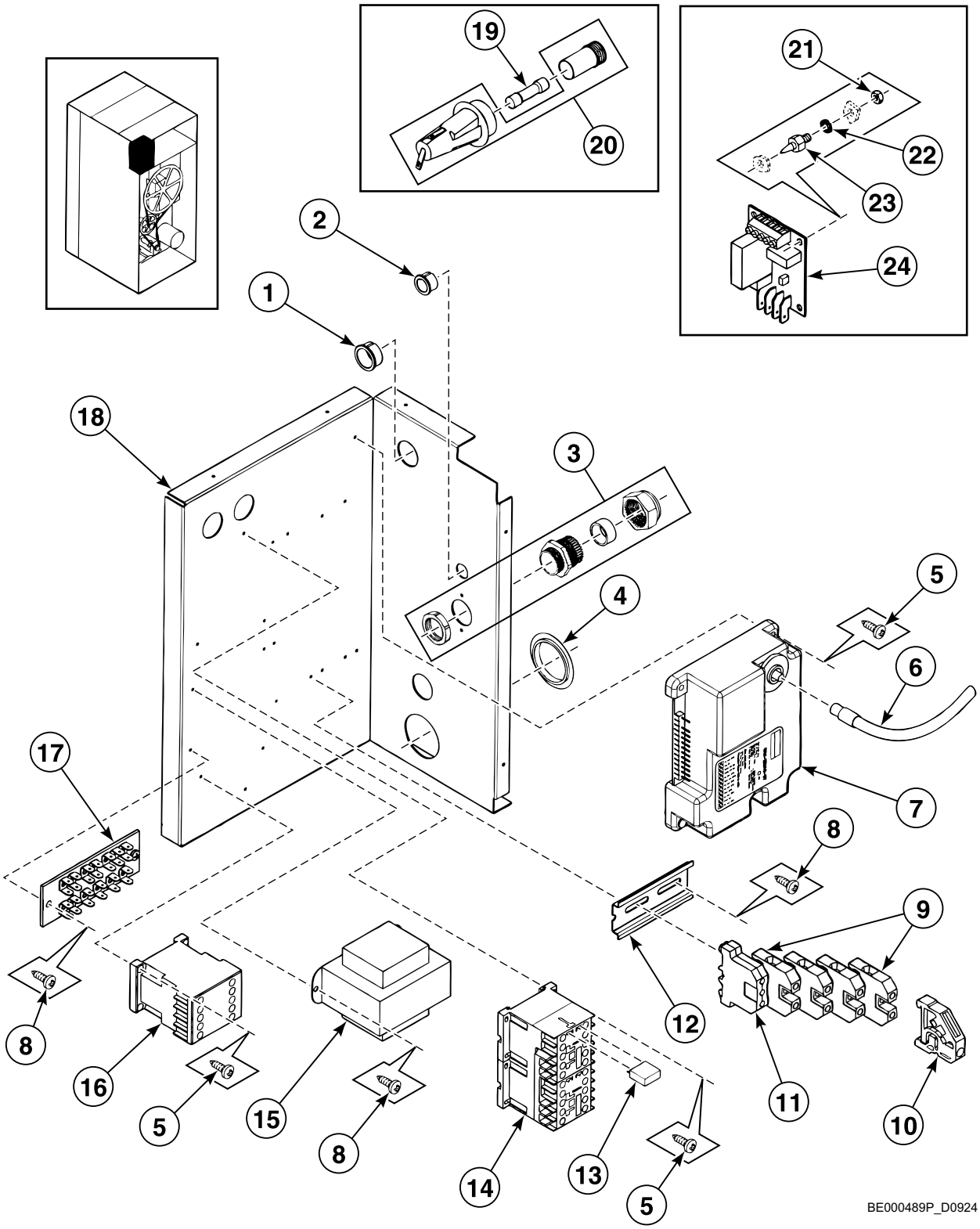

© Copyright, Alliance Laundry Systems LLC – DO NOT COPY or TRANSMIT

Electric Junction Box - Gas Models

REF	PART NO.	DESCRIPTION	COMMENTS
1	254/SB000/868	Duct	
2	254/SB000/867	Duct	
3	211/00167/00	Cordlock	
	211/00170/00	Nut	
4	254/EA000/680	Cylinder	
5	254/TU002/793	Screw	
6	254/GA000/803	Cable	
7	254/GA011/007	Ignition Module	
8	254/TU007/733	Screw	
9	254/TU014/958	Terminal Block	
10	254/TU015/007	Terminal Block	
11	254/TU014/959	Terminal Block	
12	720/00110/01	Rail	
13	254/TU014/825	Terminal Block	
14	254/EA000/685	Contactor	
15	254/TU013/480	Transformer	
16	254/TU013/463	Contactor	
17	254/TU015/265	Clamp Connection	
18	254/CA011/935	Mounting Plate	
19	209/00195/00	Fuse	
20	209/00202/00	Fuse Holder	
	209/00202/01	Fuse Holder	
21	204/00007/00	Nut	
22	203/00006/00	Washer	
23	211/00120/00	Standoff	
24	209/00438/00	Central Control Board	240 Volt
	209/00471/00	Central Control Board	24 Volt

© Copyright, Alliance Laundry Systems LLC – DO NOT COPY or TRANSMIT

Electric Junction Box - Electric and Steam Models

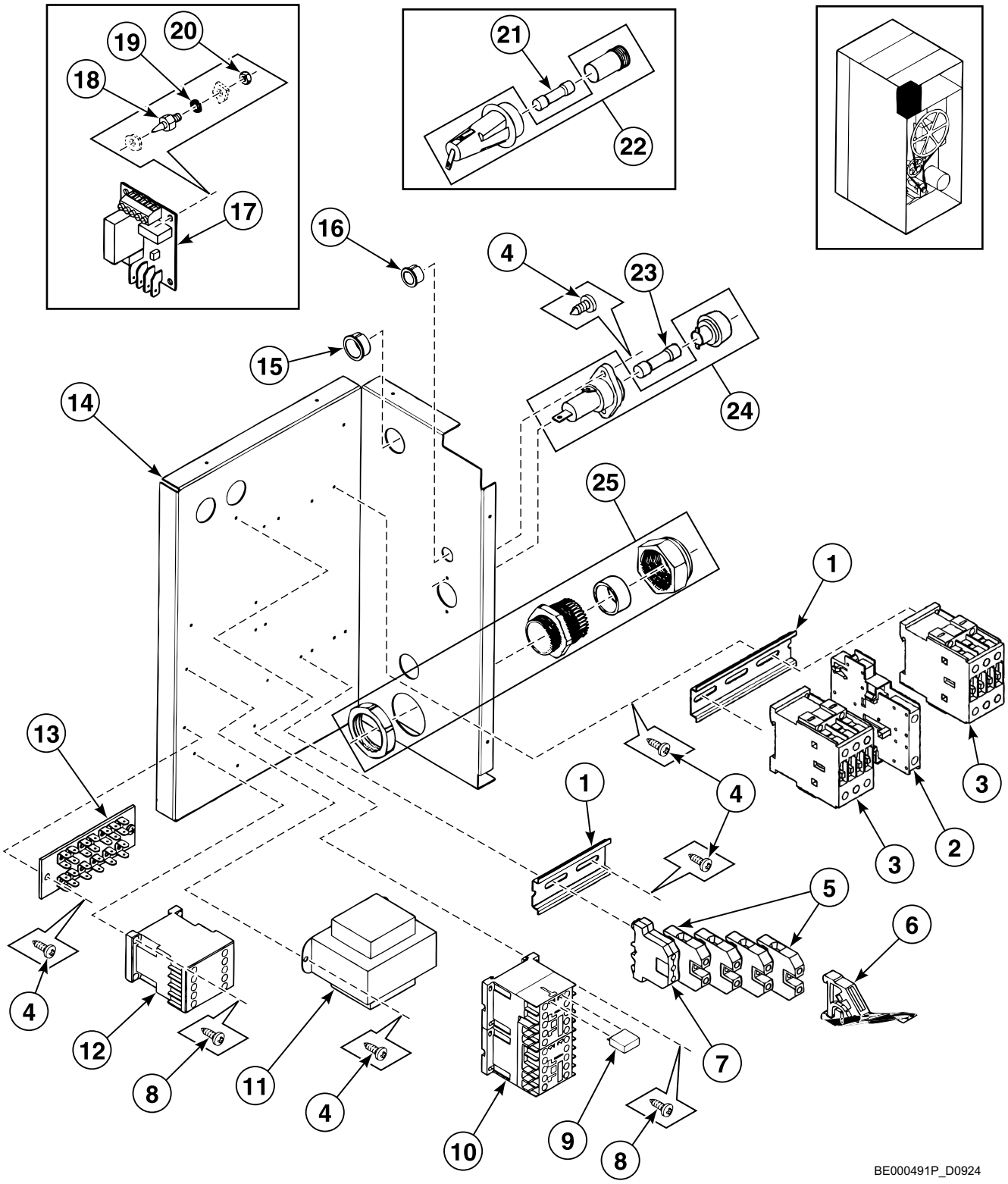

© Copyright, Alliance Laundry Systems LLC – DO NOT COPY or TRANSMIT

Electric Junction Box - Electric and Steam Models

REF	PART NO.	DESCRIPTION	COMMENTS
1	720/00110/01	Rail	
2	254/00000/122	Contactor	
3	254/00053/00	Contactor	
	254/TU014/684	Contactor	
4	254/TU007/733	Screw	
5	254/TU015/007	Terminal Block	
6	254/TU014/958	Terminal Block	
7	254/TU014/959	Terminal Block	
8	254/TU002/793	Screw	
9	254/TU014/825	Terminal Block	
10	254/EA000/685	Contactor	
11	254/TU013/480	Transformer	
12	254/TU013/463	Contactor	
13	254/TU015/265	Clamp Connection	
14	254/CA011/935	Mounting Plate	
15	254/SB000/868	Duct	
16	254/SB000/867	Duct	
17	209/00438/00	Central Control Board	240 Volt
	209/00471/00	Central Control Board	24 Volt
18	211/00120/00	Standoff	
19	203/00006/00	Washer	
20	204/00007/00	Nut	
21	209/00195/00	Fuse	
22	209/00202/00	Fuse Holder	
	209/00202/01	Fuse Holder	
23	254/EA000/683	Fuse	
24	254/EA000/682	Fuse Holder	
25	211/00169/00	Strain Relief	

© Copyright, Alliance Laundry Systems LLC – DO NOT COPY or TRANSMIT

Gas Heating System

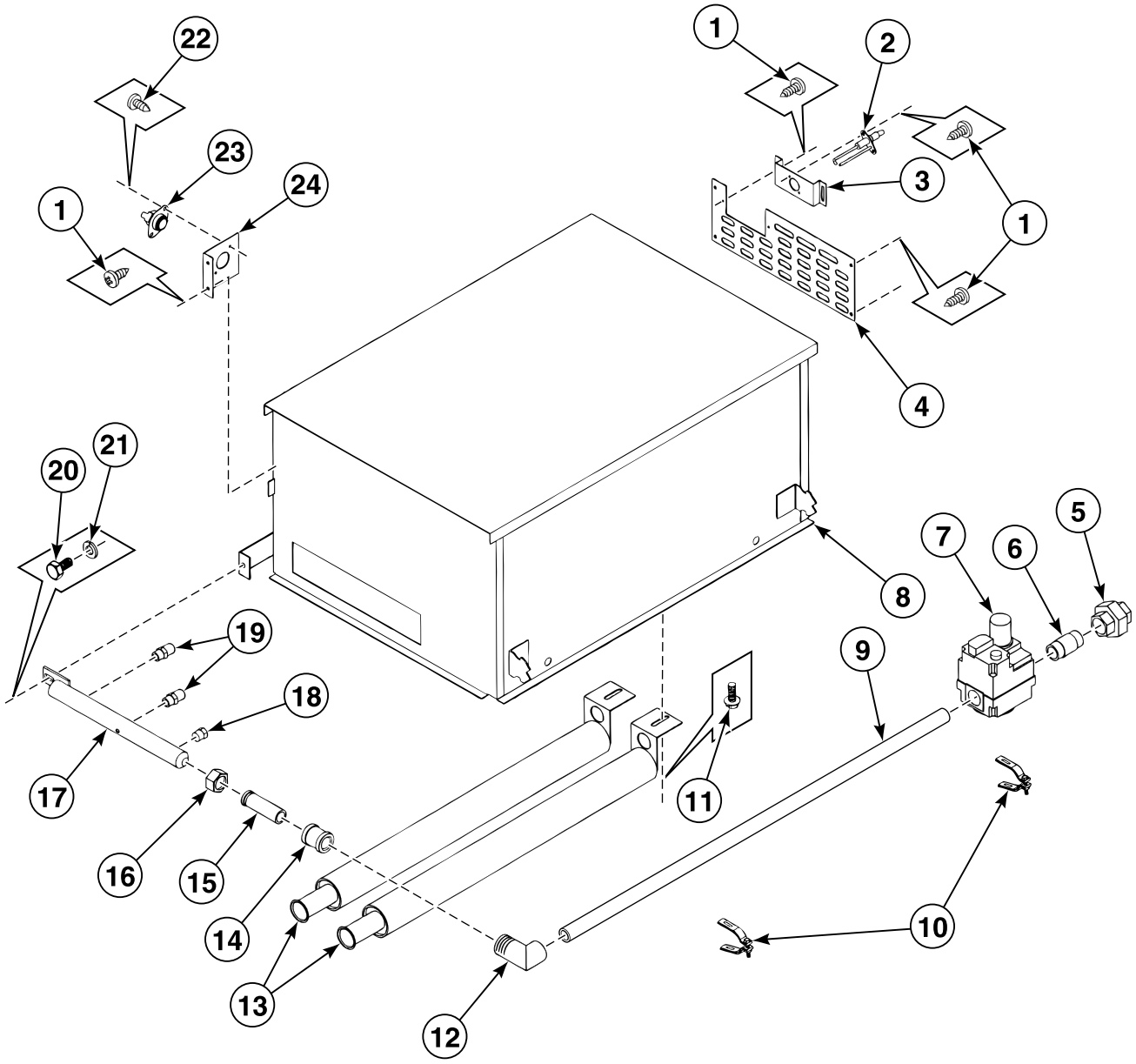

BE000477P_D0924

© Copyright, Alliance Laundry Systems LLC – DO NOT COPY or TRANSMIT

Gas Heating System

REF	PART NO.	DESCRIPTION	COMMENTS
1	254/TU007/733	Screw	
2	254/GA000/764	Igniter Electrode	
3	254/TUD00/242	Mounting Bracket	
4	254/CA013/251	Burner Shield	Models DR50-Z and DR75-Z
	254/TU015/106	Burner Shield	Models DR20-Z and DR30-Z
5	254/OP000/314	Gas Valve	
6	254/LB000/020	Gas Valve	Models DR50-Z and DR75-Z
	254/OP000/290	Gas Valve	Models DR20-Z and DR30-Z
7	254/K0000/555	Gas Conversion Kit	Models DR20-Z and DR30-Z
	254/TU014/177	Gas Conversion Kit	Models DR50-Z and DR75-Z
	254/TU014/178	Gas Conversion Kit	Models DR20-Z and DR30-Z
8	254/GSA00/791	Burner Shield	Models DR50-Z and DR75-Z
	254/TU015/101	Burner Shield	Models DR20-Z and DR30-Z
9	254/FG000/274	Gas Pipe	Models DR20-Z and DR30-Z
	254/TU007/358	Gas Pipe	Models DR50-Z and DR75-Z
10	254/TU002/226	Gas Pipe	
11	254/TU006/263	Screw	
12	254/OP000/291	Elbow	
13	254/TU013/502	Gas Burner	Models DR20-Z and DR30-Z
	254/TU014/505	Gas Burner	Models DR50-Z and DR75-Z
14	254/SC000/505	Link	
15	254/64946/146	Pipe Tail	
16	254/TU006/862	Nut	
17	254/GA011/006	Gas Pipe	
18	254/TU010/946	Gas Valve	
19	254/TU353/9082	Gas Valve	Models DR20-Z and DR30-Z
	254/TU353/9086	Gas Valve	No. 44
	254/TU353/9106	Gas Valve	Models DR50-Z and DR75-Z; No. 36
	254/TU353/9136	Gas Valve	Models DR20-Z and DR30-Z
	254/TU353/9147	Gas Valve	No. 26
	254/TU353/9173	Gas Valve	Models DR50-Z and DR75-Z; No. 17
20	254/C0000/836	Screw	
21	254/TU028/846	Washer	
22	254/TU002/878	Screw	
23	254/EA000/245	Safety Thermostat	
24	254/CA011/028	Thermostat	

© Copyright, Alliance Laundry Systems LLC – DO NOT COPY or TRANSMIT

Electric Heating System

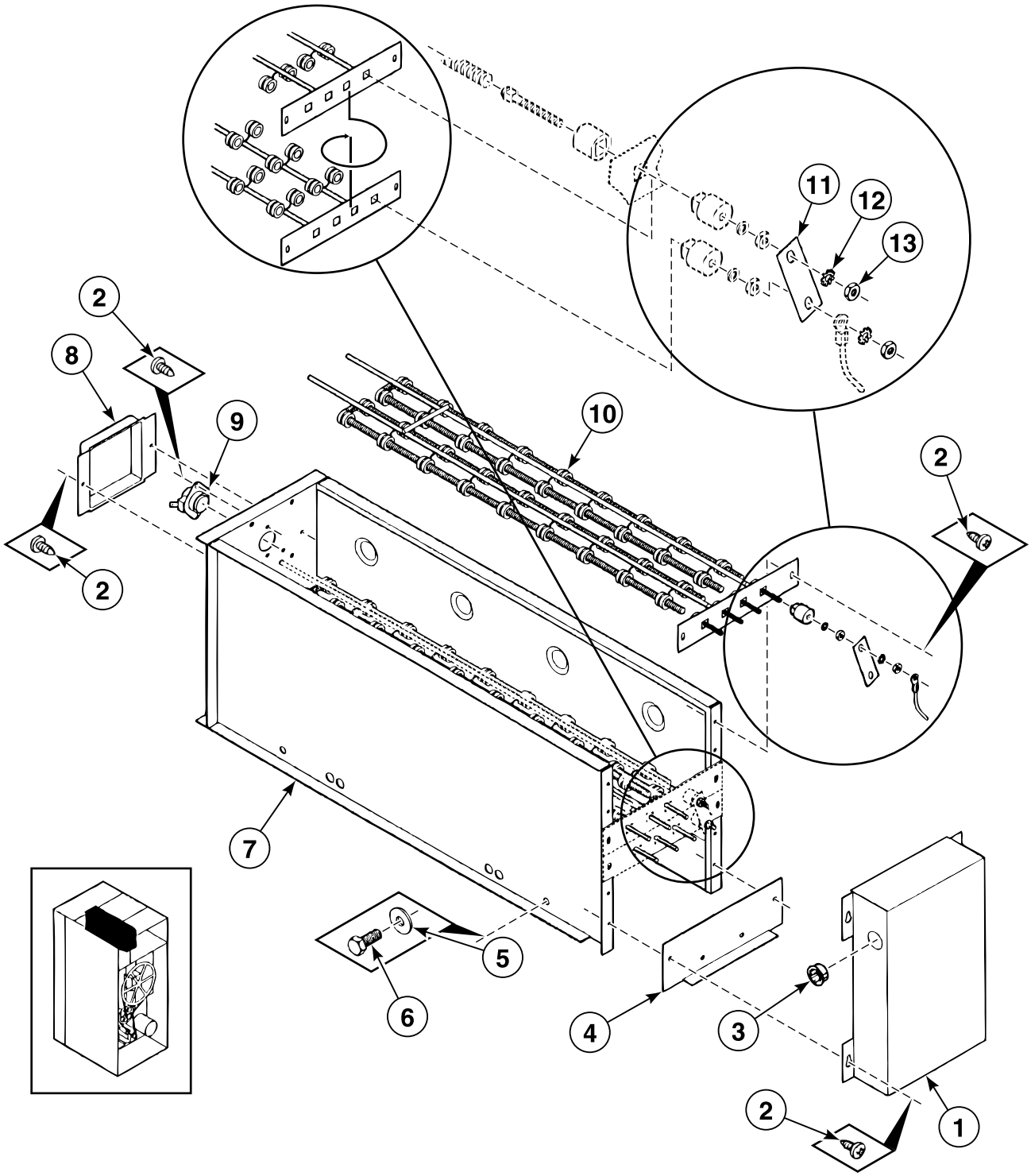

© Copyright, Alliance Laundry Systems LLC – DO NOT COPY or TRANSMIT

Electric Heating System

REF	PART NO.	DESCRIPTION	COMMENTS
1	254/CA011/984	Cap	
2	254/TU007/733	Screw	
3	254/SB000/868	Duct	
4	254/EA011/613	Plate Assembly	
	254/EA011/373	Plate Assembly	
5	254/VSB00/130	Washer	
6	254/SB000/935	Bolt	
7	254/ESA00/610	Heating Cover	
8	254/EA010/232	Cap	
9	254/EA000/243	Safety Thermostat	
10	254/EA000/472	Heating Element	
11	254/EA010/417	Jumper	
12	254/TU011/613	Washer	
13	254/TU002/842	Nut	
14	254/ESA00/316	Adapter	

© Copyright, Alliance Laundry Systems LLC – DO NOT COPY or TRANSMIT

Steam Heating System

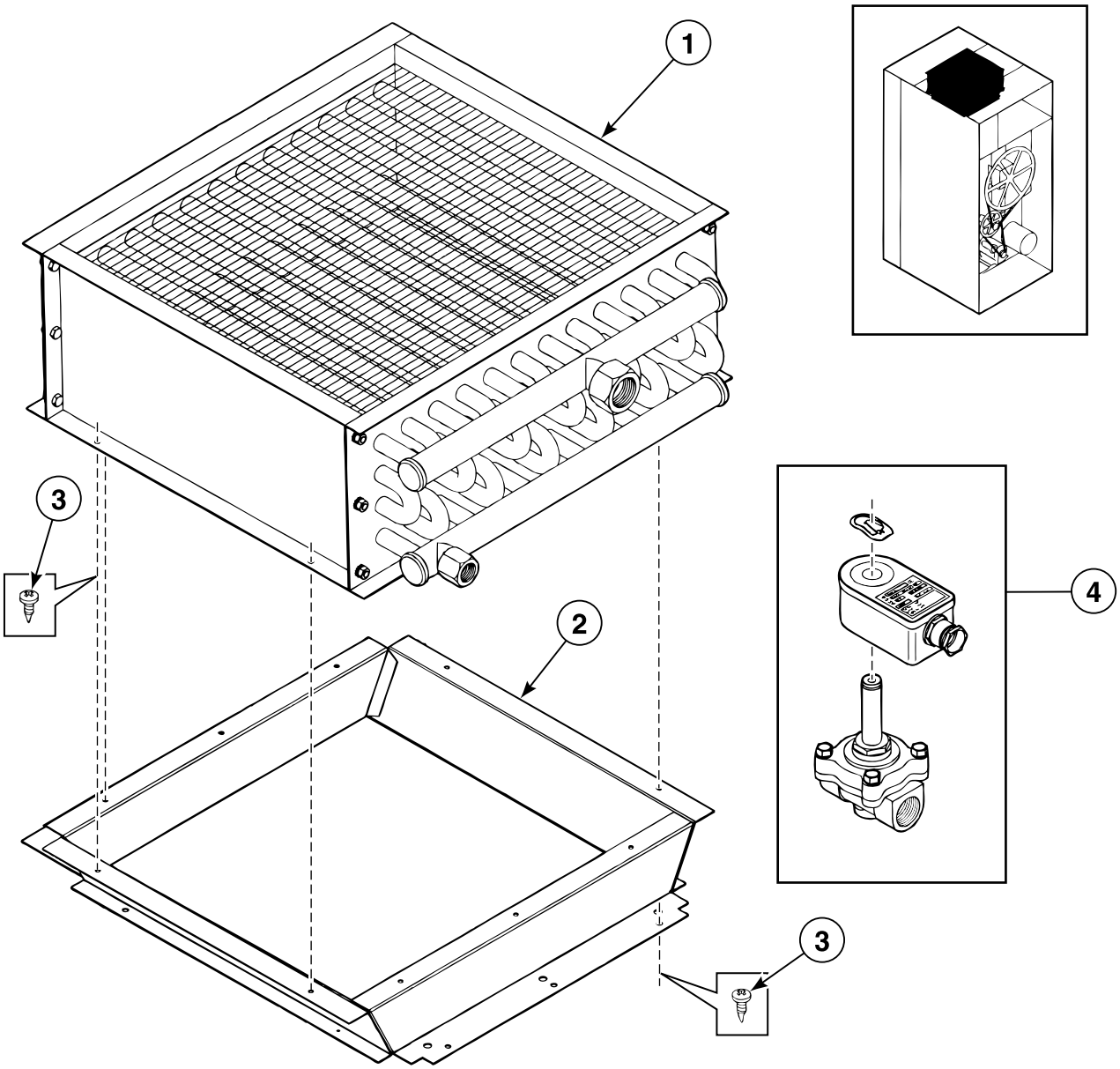

BE000482P_D0924

© Copyright, Alliance Laundry Systems LLC – DO NOT COPY or TRANSMIT

Steam Heating System

REF	PART NO.	DESCRIPTION	COMMENTS
1	254/00027/00	Steam Battery	Model DR20-Z
	254/00028/00	Steam Battery	Model DR30-Z
	254/00029/00	Steam Battery	Models DR50-Z and DR75-Z
2	254/CSA01/628	Bracket	
	254/CSA01/643	Bracket	
	254/CSA01/602	Bracket	Models DR50-Z and DR75-Z
3	254/TU007/733	Screw	
4	209/00185/00	Steam Valve	

© Copyright, Alliance Laundry Systems LLC – DO NOT COPY or TRANSMIT

Notes

© Copyright, Alliance Laundry Systems LLC – DO NOT COPY or TRANSMIT

Parts Index

A

Actuator Arm
254/TU002/463 35

Adapter
254/ESA00/316 51

Air Switch
254/TU008/155 35

Air Switch Bracket
254/TU008/171 35

Air Switch Decal
254/TU003/476 35

Axle
254/CA010/085 11
254/TU005/739 11

B

Bar Drum
254/DA000/418 25

Bearing
254/DA000/518 37

Bearing Box Assembly
254/TUD00/411 39
254/TU013/147 39

Belt
254/DA000/494 37
254/DA000/497 37
254/DA000/521 37
254/DA000/522 37
254/DA000/523 37
254/DA000/525 37
254/DA000/533 37
254/DA011/908 37
254/DA011/917 37
254/TU015/206 37

Belt Pulley
254/TU015/173 39
254/TU015/174 39

Bolt
254/DA000/445 27
254/DA011/249 29
254/SB000/898 ..... 19, 21, 23
254/SB000/935 ..... 37, 51
254/TU002/195 39
254/TU005/439 ..... 25, 27, 29, 31, 37, 41, 43
254/TU008/297 31

Bracket
254/CSA01/602 53
254/CSA01/628 53
254/CSA01/643 53

Burner Shield
254/CA013/251 49
254/GSA00/791 49
254/TU015/101 49
254/TU015/106 49

C

Cable
254/GA000/803 45

Cam Lock
254/CA011/359 17

Cap
254/CA000/617 11
254/CA011/984 51
254/EA010/232 51

Central Control Board
209/00438/00 ..... 45, 47
209/00471/00 ..... 45, 47

Clamp Connection
254/TU015/265 ..... 45, 47

Clean Lint Screen Label
254/00019/00 17

Coin Box
254/CA000/699 13
254/CSA00/753 21
254/CSA01/435 5

Coin Meter
209/00305/00 21

Coin Vault
254/TU009/225 21

Contact
209/00099/05 13

Contact Switch
209/00099/06 13
209/00099/26 13

Contactor
254/EA000/685 ..... 45, 47
254/TU013/463 ..... 45, 47
254/TU014/684 47
254/00000/122 47
254/00053/00 47

Control Board
254/00066/00 ..... 19, 21
254/00067/00 ..... 19, 21
254/00070/00 23

Control Label
254/00018/00 23

Cordlock
211/00167/00 45

Cylinder
254/EA000/680 45

D

Door Assembly
254/TU015/076 15

Door Fender
254/CA000/833 17
254/CA000/838 17
254/CA000/839 17
254/CSA00/828 17

Door Glass
254/TU015/107 15

N/A items do not appear in index.

© Copyright, Alliance Laundry Systems LLC – DO NOT COPY or TRANSMIT

Door Glass Gasket
254/TU015/108 15
Door Rim Gasket
254/MD000/360 15
Door Trim
254/CA000/645 17
254/CA000/646 17
254/CA000/647 17
254/CA000/697 17
Draught Band
254/CA013/098 11
254/TU002/853 ..... 11, 17
Drum
254/CSA01/538 27
254/CSA01/540 29
254/CSA01/695 31
254/TUS13/987 25
Duct
254/SB000/867 ..... 45, 47
254/SB000/868 ..... 19, 21, 23, 45, 47, 51
Dust Cover
254/DA000/460 41
Dust Filter
254/CSA01/528 5
254/TU010/290 5

E

Elbow
254/OP000/291 49
Eprom
209/00266/01 23
E-Ring
254/F0000/888 35

F

Fan
254/DSA00/773 41
Fender
254/CA000/655 17
Fender Panel
254/CA000/855 11
254/CA000/856 11
254/CA000/857 11
254/CA000/858 11
Front Panel
254/CSA01/408 11
254/CSA01/416 11
254/CSA01/511 11
254/CSA01/516 17
254/CSA01/593 17
254/CSA10/97W 17
254/CSA10/98W 17
254/CSA13/83W 17
254/CSA13/87W 17
254/TU014/954 17
254/TU015/045 17
254/TU015/278 11
Front Plate
254/CA011/265 21
Fuse
209/00195/00 ..... 45, 47
209/00506/00 ..... 19, 21
209/00507/00 23
254/EA000/683 47
Fuse Holder
209/00202/00 ..... 45, 47
209/00202/01 ..... 45, 47
254/EA000/682 47

G

Gas Burner
254/TU013/502 49
254/TU014/505 49
Gas Conversion Kit
254/K0000/555 49
254/TU014/177 49
254/TU014/178 49
Gas Pipe
254/FG000/274 49
254/GA011/006 49
254/TU002/226 49
254/TU007/358 49
Gas Valve
254/LB000/020 49
254/OP000/290 49
254/OP000/314 49
254/TU010/946 49
254/TU353/9082 49
254/TU353/9086 49
254/TU353/9106 49
254/TU353/9136 49
254/TU353/9147 49
254/TU353/9173 49
Gasket
254/TU002/473 41
254/TU002/474 41
254/TU005/876 5
254/TU015/073 15

H

Heating Cover
254/ESA00/610 51
Heating Element
254/EA000/472 51

I

Idler Shaft
254/DA011/711 37
Igniter Electrode
254/GA000/764 49
Ignition Module
254/GA011/007 45
Insulation Panel
254/CA000/676 13
254/TU014/991 13
254/TU014/992 13
Insulator
254/TU001/770 35

N/A items do not appear in index.

© Copyright, Alliance Laundry Systems LLC – DO NOT COPY or TRANSMIT

J

Jumper
254/EA010/417 51

K

Key
254/LA000/119 11
254/SB000/971 11
254/TUD00/187 37
254/00000/119 17

Keypad Label
254/00033/00 21
254/00069/00 19

L

Leveling Leg
254/TU003/211 ..... 5, 33

Link
254/SC000/505 49

Lint Filter
254/CA010/567 5
254/TU005/225 5

Lint Screen
254/CA013/033 5
254/TU010/362 5

Lock
254/LA000/121 ..... 11, 17
254/LA000/401 21
254/LA011/941 11
254/TU002/876 13

Lock Hatch Assembly
254/LA000/124 17

Lower Back Panel
254/CA013/259 33
254/TU015/062 33
254/TU015/151 33
254/TU015/231 33

M

Magnetic Switch Holder
254/00017/00 13

Microswitch
254/EA000/650 5

Motor
254/DA011/909 43

Motor Assembly
254/DA000/428 41
254/DA000/447 ..... 41, 43
254/DA000/477 41
254/DA000/480 41
254/DA011/907 41

Motor Plate Assembly
254/DSA00/801 41
254/TU014/869 41
254/TU015/227 41

Mounting Bracket
254/TUD00/242 49

Mounting Plate
254/CA011/935 ..... 45, 47

Mushroom Pushbutton
209/00248/00 13
209/00248/20 13

N

Nut
204/00007/00 ..... 9, 45, 47
204/00008/00 21
211/00170/00 45
254/C0000/249 ..... 25, 27, 29, 37, 41
254/OP000/233 39
254/SB000/813 41
254/TUD00/367 ..... 19, 21, 23
254/TU001/771 35
254/TU002/842 ..... 19, 21, 23, 51
254/TU002/882 31
254/TU003/266 ..... 7, 9
254/TU003/400 ..... 7, 9
254/TU004/840 15
254/TU006/862 49
254/TU010/644 39
254/TU015/157 39

O

Operating Door
254/CSA01/529 19
254/CSA01/530 21
254/CSA01/535 23

Operating Touchpad
254/00021/00 19
254/00039/00 23

P

Panel
254/CSA01/524 13
254/CSA15/61W 13
254/CSA15/64W 13
254/CSA15/68W 13
254/TU014/532 13
254/TU014/951 13
254/TU015/050 13
254/TU145/44W 13

Pipe Tail
254/64946/146 49

Plate
254/TU014/946 39

Plate Assembly
254/CA012/059 37
254/CA013/067 7
254/EA011/373 51
254/EA011/613 51
254/00048/00 11
254/00062/00 9

Plug
254/TU010/676 39
254/TU013/334 39

N/A items do not appear in index.

© Copyright, Alliance Laundry Systems LLC – DO NOT COPY or TRANSMIT

Pulley
254/DA000/510 41
254/DA000/516 41
254/DA000/531 37
254/TU000/690 43
254/TU006/559 ..... 41, 43
254/TU010/998 43
254/TU011/184 43
254/TU014/689 41
254/TU015/162 41
254/TU015/167 ..... 41, 43

Pulley Housing
254/DA000/517 37

R

Rail
720/00110/01 ..... 45, 47

Reed Switch Assembly
254/ESA00/862 13

Reed Switch Magnet
254/MD000/337 15

Reinforcement Bracket
254/TU007/006 ..... 25, 27, 29, 31

Rivet
254/TU003/213 13

Rotation Sensor
254/TU014/414 ..... 23, 39

S

Safety Thermostat
254/EA000/243 51
254/EA000/245 49

Screw
207/00004/00 9
207/00108/00 21
254/CA013/218 15
254/C0000/836 49
254/M000/262 7
254/RC000/347 39
254/SB000/836 ..... 19, 21, 23
254/SB000/921 15
254/SB000/924 13
254/SB000/936 11
254/SB000/949 17
254/SB000/951 11
254/SB000/952 ..... 7, 9
254/SB000/965 ..... 27, 29, 31
254/SB000/975 13
254/TU002/793 ..... 45, 47
254/TU002/818 27
254/TU002/878 49
254/TU003/219 35
254/TU006/263 49
254/TU007/733 ..... 5, 7, 9, 11, 13, 17, 21, 23, 25, 33, 35, 45, 47, 49, 51, 53

Sheave
254/TU014/691 37

Side Panel
254/TU014/819 ..... 5, 33
254/TU014/900 ..... 5, 33
254/TU015/139 ..... 5, 33
254/TU015/200 ..... 5, 33

Spacer
254/TU014/701 ..... 19, 21, 23

Standoff
211/00120/00 ..... 45, 47

Steam Battery
254/00027/00 53
254/00028/00 53
254/00029/00 53

Steam Valve
209/00185/00 53

Strain Relief
211/00169/00 47

T

Telem Sticker
209/00520/00 13

Temperature and Humidity Sensor
254/00007/00 7
254/00008/00 7
254/00009/00 7
254/00058/00 9
254/00059/00 9
254/00071/10 9

Temperature Switch
254/EA000/594 ..... 7, 9

Terminal Block
254/TU014/825 ..... 45, 47
254/TU014/958 ..... 45, 47
254/TU014/959 ..... 45, 47
254/TU015/007 ..... 45, 47

Thermostat
254/CA011/028 49

Thermostat/Hygrometer Protection
254/00063/00 9

Top Panel
254/TU014/849 ..... 5, 33
254/TU015/152 ..... 5, 33
254/TU015/183 ..... 5, 33
254/TU015/228 ..... 5, 33

Top Plate Assembly
254/00061/00 9

Transformer
254/TU013/480 ..... 45, 47

Trommel
254/TU010/850 39
254/TU013/335 39
254/TU015/304 39

Trunnion
254/TU014/865 31
254/TU014/891 29
254/TU015/087 25
254/TU015/220 27

U

Upper Back Panel
254/CA013/272 33
254/TU015/061 33
254/TU015/150 33
254/TU015/230 33

N/A items do not appear in index.

© Copyright, Alliance Laundry Systems LLC – DO NOT COPY or TRANSMIT

V

Valve
254/TU015/234 33

Vent Panel
254/TU014/642 33
254/TU014/651 33
254/TU014/652 33
254/TU014/653 33

W

Washer
203/00006/00 ..... 9, 45, 47
203/00007/00 21
254/OP000/251 39
254/SB000/843 ..... 25, 27, 29, 31
254/SB000/847 41
254/SB000/852 15
254/SB000/938 13
254/TU002/814 ..... 25, 27, 29, 31, 37, 41, 43
254/TU002/831 ..... 31, 39
254/TU002/883 ..... 31, 39
254/TU011/613 ..... 19, 21, 23, 51
254/TU015/153 39
254/TU015/154 39
254/TU028/846 49
254/VSB00/130 ..... 25, 27, 29, 37, 41, 51
254/VSD00/130 43

Wiring Clip
254/EA000/395 ..... 19, 21, 23

N/A items do not appear in index.

© Copyright, Alliance Laundry Systems LLC – DO NOT COPY or TRANSMIT

Notes

© Copyright, Alliance Laundry Systems LLC – DO NOT COPY or TRANSMIT